ARI ARMATUREN

Operating and installation instructions

Multi-capsule thermostatic steam traps
CONA®M (PN16 / 40)

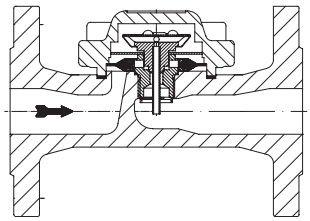

PN16 (pilot operated)

- with flanges (series 616....1)

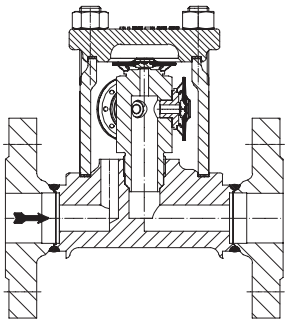

PN40 (4 capsules)

- with flanges (series 616....1)
- with screwed sockets (series 616....2)
- with socket weld ends (series 616....3)
- with butt weld ends (series 616....4)

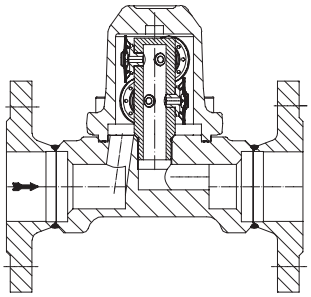

PN40 (6 capsules)

- with flanges (series 616....1)
- with screwed sockets (series 616....2)
- with socket weld ends (series 616....3)
- with butt weld ends (series 616....4)

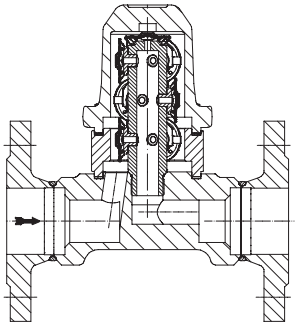

PN40 (10 capsules)

- with flanges (series 616....1)
- with screwed sockets (series 616....2)
- with socket weld ends (series 616....3)
- with butt weld ends (series 616....4)

Contents

Rev. 0040804002 3209 englisch

1.0 General information on operating instructions

These operating instructions provide information on mounting and maintaining the fittings. Please contact the supplier or the manufacturer in case of problems which cannot be solved by reference to the operating instructions.

They are binding on the transport, storage, installation, start-up, operation, maintenance and repair.
The notes and warnings must be observed and adhered to.

- Handling and all work must be carried out by expert personnel or all activities must be supervised and checked.

It is the owner's responsibility to define areas of responsibility and competence and to monitor the personnel.

- In addition, current regional safety requirements must be applied and observed when taking the fittings out of service as well as when maintaining and repairing them.

The manufacturer reserves the right to introduce technical modifications at any time.

These Operating Instructions comply with the requirements of EU Directives.

2.0 Notes on possible dangers

2.1 Significance of symbols

⚠ ***ATTENTION !*** . . .	Warning of general danger.

2.2 Explanatory notes on safety information

In these Operating and Installation Instructions dangers, risks and items of safety information are highlighted to attract special attention.

Information marked with the above symbol and "***ATTENTION***!" describe practices, a failure to comply with which can result in serious injury or danger of death for users or third parties or in material damage to the system or the environment. It is vital to comply with these practices and to monitor compliance.

All other information not specifically emphasised such as transport, installation, operating and maintenance instructions as well as technical data (in the operating instructions, product documentation and on the device itself) must also be complied with to the fullest extent in order to avoid faults which in turn can cause serious injury to persons or damage to property.

3.0 Storage and transport

⚠ ***ATTENTION !***

- *Protect against external force (like impact, vibration, etc.).*
- *Valves must not be used to take external forces, e.g. they are not designed for use as climbing aids, or as connecting points for lifting gear.*
- *Suitable materials handling and lifting equipment should be used. See catalog sheet for weights.*

- At -20°C to +65°C.
- The paint is a base coat to protect against corrosion during transportation and storage. Do not damage paint protection.

4.0 Description

4.1 Scope of applications

Thermostatic steam traps with thermal controller are used for the drainage of industrial steam facilities.

ATTENTION !
- *Refer to the data sheet for applications, limits on use and possibilities.*
- *Certain media require or preclude the use of special materials.*
- *The valves are designed for standard operating conditions. If conditions exceed these requirements, e.g. aggressive or abrasive media, the operator should state the higher requirements when ordering.*
- *Valves made from grey cast iron are not authorised for use in systems subject to TRD 110.*

The information complies to the Pressure Equipment Directive 97/23/EC.
It is the responsibility of the machine planner to ensure compliance.
The special markings on the valve must be taken into account.

Refer to the catalogue sheet to see which materials are used in standard versions.

Please contact the supplier or the manufacturer if you have any questions.

4.2 Operating principles

The steam trap uses the condensate temperature and available upstream pressure for control. It vents automatically during system start-up and operation. It has one (or multiple) corrosion-resistant, water hammer-proof diaphragm capsule which always discharges the consistently supercooled condensate a few degrees below the upstream pressure-dependent boiling temperature.

Two capsule types are available with different discharge temperatures:

Capsule	Discharge temperature
No. 2	approx. 10 Kelvin below boiling temperature
No. 3	approx. 30 Kelvin below boiling temperature

The controller designation and capsule type are stated on the type plate

Series 616 PN16 (version with pilot valve):

(see Fig. 1 page 4)
If the discharge of large amounts of condensate is required, the master valve, comprising the seat (Pos. 3) and nozzle piston (Pos. 10), is opened using an additional mechanism (disc piston).
To operate reliably the pilot valve needs a minimum pressure differential (ΔP) of 1 bar.

Series 616 PN40 (version with multi-capsule):

(see Fig. 2 page 4 - Fig. 5 page 5)
Through the parallel connection of multi membrane capsules Type B, a multiplication of the flow capacity is achieved.
At the same time drops a strainer and a non-return protection.

We recommend a ARI Strainer Fig. 050 in front of the steam trap.

4.3 Diagram

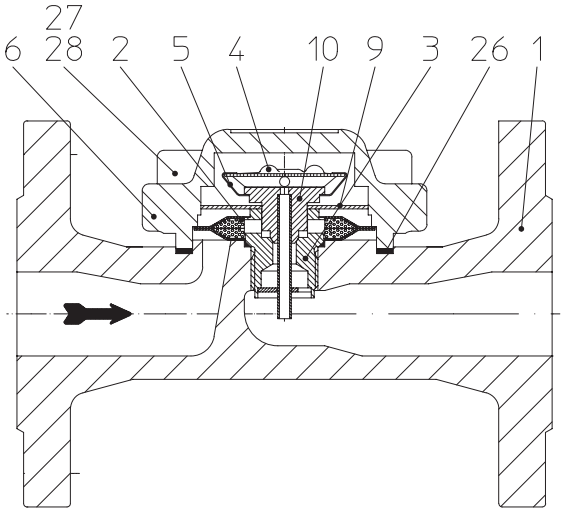

Fig. 1: CONA®M - series 616 PN16
pilot operated

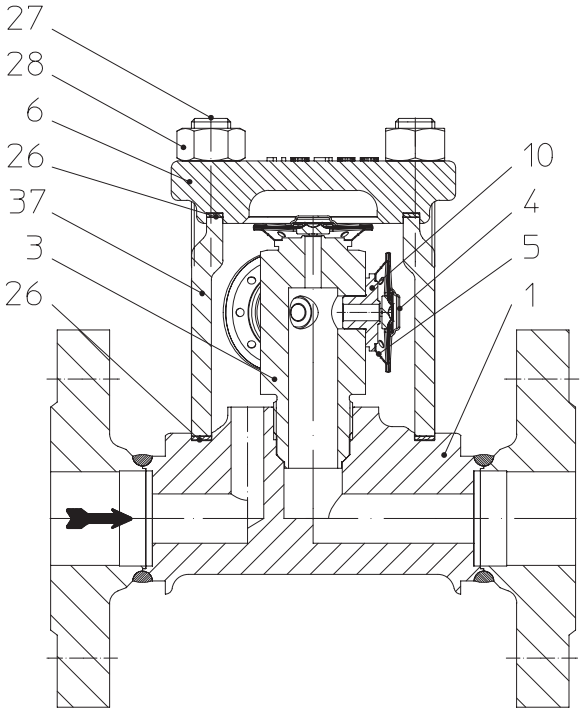

Fig. 2: CONA®M - series 616 PN40
with 4 capsules

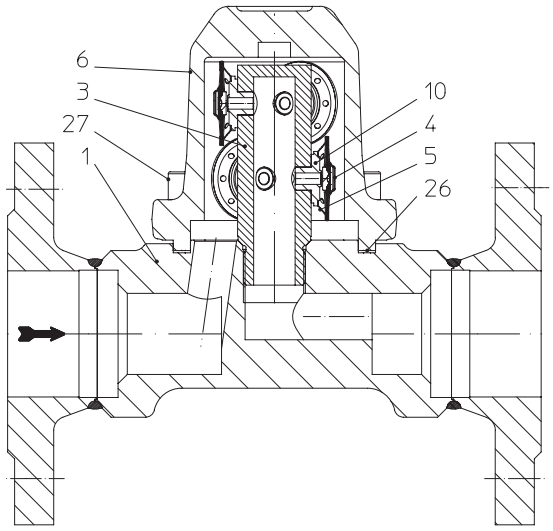

Fig. 3: CONA®M - series 616 PN40
with 6 capsules

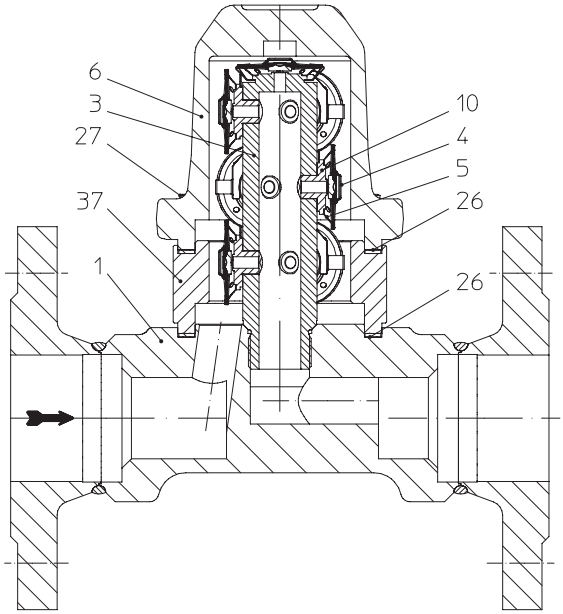

Fig. 4: CONA®M - series 616 PN40
with 10 capsules

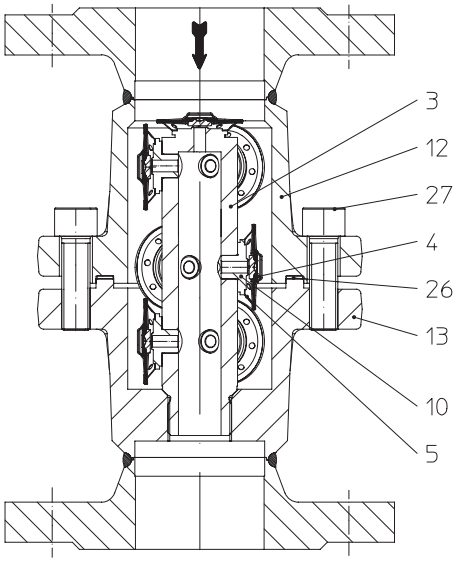

Fig. 5: CONA®M - BR616 PN40
with 10 capsules (In-line design)

Refer to the data sheet for information about materials with designations and figure numbers.

4.4 Technical data - remarks

for

- Principal dimensions,

- Pressure-temperature-ratings, operating limits,

- Valves with different types of connection , etc.
refer to datasheet.

4.5 Marking

Details of the CE-marking on the valve:

CE	CE-marking	
0045	Notified body	
AWH	Manufacturer	Address of manufacturer: refer to item 11.0 Warranty / Guarantee
Typ	Type	
Bj.	Year of manufacture	

According to the Pressure Equipment Directive appendix 2 diagram 7 valves acc. to article 1 paragraph 2.1.2 (pipes) only show the CE-marking from DN40 onwards.

5.0 Installation

5.1 General notes on installation

The following points should be taken into account besides the general principles governing installation work:

ATTENTION !

- Remove flange covers if present.

- The interior of valve and pipeline must be free from foreign particles.

- Installation in any position (except screw cap/cover downwards). Note installation position with reference to flow, see mark on valve.

- Steam line systems should be designed to prevent water accumulation.

- Lay pipelines so that damaging transverse, bending and torsional forces are avoided.

- Protect valves from dirt during construction work.

- Connection flanges must mate exactly.

- Valves must not be used to take external forces, e.g. they are not designed for use as climbing aids, or as connecting points for lifting gear.

- Suitable materials handling and lifting equipment should be used. See data sheet for weights.

- Centre gaskets between the flanges.

- Precautions against freezing should be taken as a matter of course in any facilities susceptible to frost.

- Planners / construction companies or operators are responsible for positioning and installing products.
- The valves are designed for application, not influenced from weather.
- For application outside or in adverse environments like corrosion-promoting conditions (sea water, chemical vapours, etc.), special constructions or protective measures are recommended.

5.2 Installation instructions for welding

It should be noted that fittings must only be welded by qualified persons using appropriate equipment and working in accordance with technical regulations.
The responsibility lies with the system operator.

Please refer to the catalogue sheet for information on type and instructions relating to welding socket weld ends/butt weld ends.

When welding products to the pipeline system they should be adequately cooled to prevent any adverse effect on the complete controller assembly (Pos. 24) or possibly the sealing ring (Pos. 26). The heat-affected zone should be restricted to the immediate weld seam area!
Note pre- and post-welding heat treatment in accordance with Material Fact Sheet DIN EN 10222.

5.3 Controller adjustment

The steam trap is manufactured with 2 different capsule types. Adjustment is not possible.

5.4 Performance control with ultrasonic instrument

Testing the operation of the steam trap in the installed state is straightforward with the "ARImetec®-S" function tester.

Refer to data sheet „ARImetec®-S".

5.5 Installation position

The steam trap can be installed in any position except with the cover (Pos. 6) down.
Note direction of flow when installing, see marking on valve.

6.0 Putting the valve into operation

ATTENTION !

- Before putting the valve into operation, check material, pressure, temperature and direction of flow.
- Regional safety instructions must be adhered to.
- Residues in piping and valves (dirt, weld beads, etc.) inevitably lead to leakage.
- Touching the valve when it is operating at high (> 50°C) or low (< 0°C) media temperatures can cause injury.
Affix warning notice or protective insulation as appropriate!

Before putting a new plant into operation or restarting a plant after repairs or modification, always make sure that:

- All works has been completed!
- The valve is in the correct position for its function.
- Safety devices have been attached.

7.0 Care and maintenance

Maintanance and maintenance-intervals have to be defined by the operator according to the requirements.

ATTENTION !

- refer to item 10.0 and 11.0 prior to dismantling and repair work!
- refer to item 6.0 before restarting the plant!

Prior to installation, threads and seal faces should be coated with temperature-stable lubricant (e.g. "OKS Anti-Seize Paste" white/metal-free).

7.1 Cleaning / replacing controller assembly

(refer to Fig. 1 page 4 - Fig. 5 page 5)

- Depressurize steam trap (supply line, with back pressure also isolate drain line).
- Loose cover bolting (Pos. 27 or 28) and disassemble.
- Pull spring clip (Pos. 5) off radially and remove diaphragm capsule (Pos. 4) from seat (Pos. 3) or nozzle piston (Pos. 10).

Series 616 PN16:

- Remove nozzle piston (Pos. 10), pull off disc piston (Pos. 9), remove strainer (Pos. 2) if necessary.
- Clean body (Pos. 1) and strainer (Pos. 2) as well as all seal faces.
- Clean diaphragm capsule (Pos. 4) and check sealing components at seat (Pos. 3) and nozzle piston (Pos. 10). If the operator thinks there is unwarranted leakage of steam at the steam trap, we recommend replacing the membrane capsule (Pos. 4). If the seal faces at the seat (Pos. 3) and nozzle piston (Pos. 10) are damaged, these should also be replaced with new components.
- Insert strainer (Pos. 3), making sure seat/body sealing faces are clean.
- Screw seat (Pos. 3) in and tighten (see 7.3).
- Fit diaphragm capsule (Pos. 4) to seat (Pos. 3) or nozzle piston (Pos. 10) and push the spring clip (Pos. 5) radially into slot of seat (Pos. 3) or nozzle piston (Pos. 10), at the same time pushing the two angled ends of the spring clip legs (Pos. 5) onto the diaphragm capsule (Pos. 4).

BR616 PN40:

- Clean diaphragm capsule Type B (Pos. 4) and check the functions (refer to item 7.2)
- Control sealing contours at seat (Pos. 3) and diaphragm capsule (Pos. 4) and replace if damaged.

- Assemble in reverse order (see 7.3).

7.2 Performance control of the membran capsule

When the diaphragm capsule is dry an cold, the diaphragm must be in contact with the top part of the wall (as shown in Fig. 6 and Fig. 8).

If the diaphragm is away from the top surface, and/or in contact with the bottom part of the wall (as shown in Fig. 7 and Fig. 9), the capsule is defective and should be replaced.

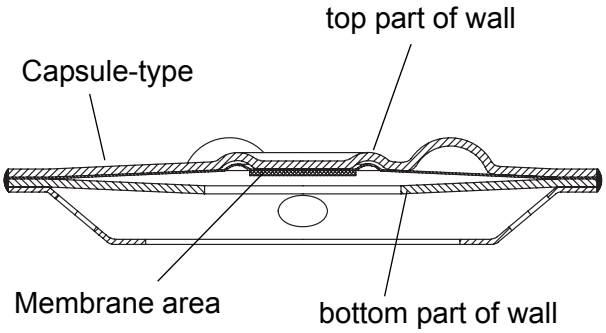

Fig. 6: Capsule OPEN

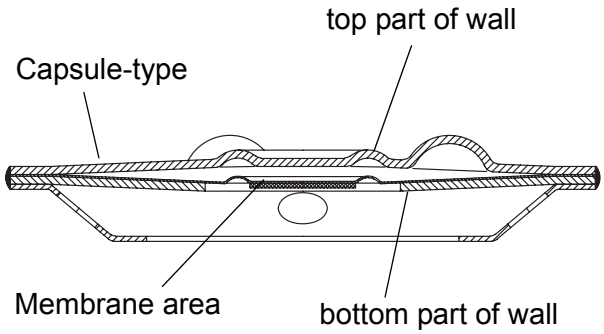

Fig. 7: Capsule CLOSED

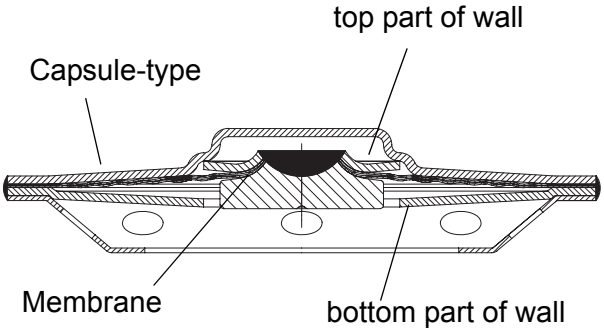

Fig. 8: Capsule (Type B) OPEN

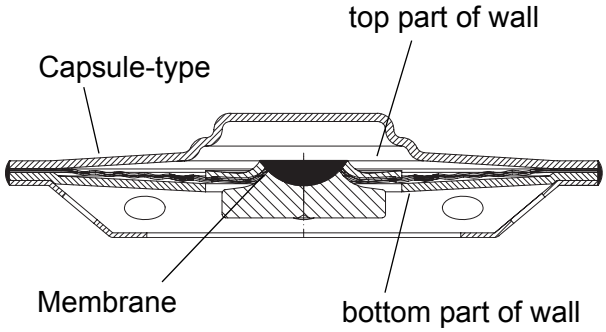

Fig. 9: Capsule (Type B) CLOSED

7.3 Tightening torques

(refer to Fig. 1 page 4 - Fig. 5 page 5)

Pos.	CONA M PN16	Torque (Nm)
3	Seat	60
27	Cheese head screw M10	30

Pos.	CONA M PN40	Torque (Nm)
3	Seat	80
27	Cheese head screw M12	40
27	Stud	40
28	Hexagon nut	40

8.0 Troubleshooting

In the event of malfunction or faulty operating performance check that the installation and adjustment work has been carried out and completed in accordance with these Operating Instructions.

ATTENTION !
- It is essential that the safety regulations are observed when identifying faults.

If malfunctions cannot be eliminate with the help of the following table
"**9.0 Troubleshooting table**", the supplier or manufacturer should be consulted.

9.0 Troubleshooting table

ATTENTION !
- refer to item 10.0 and 11.0 prior to dismantling and repair work!
- refer to item 6.0 before restarting the plant!

Fault	Possible cause	Corrective measures
No flow	Installed in wrong flow direction.	Fit valve in direction of flow arrow
	Flange covers not removed	Remove flange covers
Little flow	Strainer clogged (Pos. 2)	Clean / replace strainer; refer to item 7.1
	Piping system clogged	Check piping system
	Wrong controller size choosen	Correct selection acc. to flow diagram
	Changed upstream pressure or back pressure operating conditions	Correct selection acc. to flow diagram
No closure, or internal leakage	Diaphragm capsule (Pos. 4) clogged	Clean strainer and diaphragm capsule; refer to item 7.1
	Diaphragm capsule worn out	Replace diaphragm capsule; refer to item 7.1
	Seat (Pos. 3) incorrectly screwed into body	Check seal face between body and seat, tighten seat correctly; refer to item 7.3
External leakage	Sealing cap (Pos. 6), top part of body (Pos. 12) or cover with hex. nut (Pos. 28) not properly tightened	Tighten; refer to item 7.3
	Seal (Pos. 26) defective	Replace seal; see 7.1

10.0 Dismantling the valve or the body

ATTENTION !

The following points must be observed:
- Pressureless pipe system.
- Medium must be cool.
- Plant must be drained.

11.0 Warranty / Guarantee

The extent and period of warranty cover are specified in the "Standard Terms and Conditions of Albert Richter GmbH & Co. KG" valid at the time of delivery or, by way of departure, in the contract of sale itself.

We guarantee freedom of faults in compliance with state-of-the-art technology and the confirmed application.

No warranty claims can be made for any damage caused as the result of incorrect handling or disregard of operating and installation instructions, datasheets and relavant regulations.

This warranty also does not cover any damage which occurs during operation under conditions deviating from those laid down by specifications or other agreements.

Justified complaints will be eliminated by repair carried out by us or by a specialist appointed by us.

No claims will be accepted beyond the scope of this warranty. The right to replacement delivery is excluded.

The warranty shall not cover maintenance work, installation of external parts, design modifications or natural wear.

Any damage incurred during transport should not be reported to us but *rather* to the competent cargo-handling depot, the railway company or carrier company immediately or else claims for replacements from these companies will be invalidated.

Technology for the Future.

GERMAN QUALITY VALVES

ARI-Armaturen Albert Richter GmbH & Co. KG, D-33756 Schloß Holte-Stukenbrock
Telephone (+49 5207) 994-0 Telefax (+49 5207) 994-158 or 159
Internet: http://www.ari-armaturen.com E-mail: info.vertrieb@ari-armaturen.com

12.0 EC declaration of conformity

® AWH ARMATUREN-
WERK HALLE GMBH
a member of the ARI group

AWH Armaturenwerk Halle GmbH,
Turmstrasse 118, D-06110 Halle/Saale

EC declaration of conformity

as defined by
the Pressure Equipment Directive 97/23/EC

Herewith we declare,

that according to the above mentioned Pressure Equipment Directive (PED) the below listed products comply and have been approved according to Module B1+D through TÜV Hannover/Sachsen Anhalt e.V. (BS-No. 0045), Saalfelder Strasse 33-34, 06116 Halle/Saale.

Thermostatic steam traps
CONA® M

Series	Nom. pressure	Material	DN	Certificate-No.
616	PN 40	1.0460	40-50	07 202 6736 Z 0016/2/E 43;...44
616	Class 300	SA105	1 1/2“ - 2“	0662/125/02
616	Class 300	SA182F321	1 1/2“ - 2“	0662/125/02

Applied standards:

DIN 3840
AD 2000-leaflet
ASME VIII/1

Halle/Saale, den 21.08.2009

.....
(Breshmann, Managing director)