GEMÜ 710

Pneumatically operated ball valve

EN **Operating instructions**

further information
webcode: GW-710

All rights including copyrights or industrial property rights are expressly reserved.

Keep the document for future reference.

© GEMÜ Gebr. Müller Apparatebau GmbH & Co. KG
23.11.2020

Contents

1 General information 4
1.1 Information 4
1.2 Symbols used 4
1.3 Definition of terms 4
1.4 Warning notes 4
2 Safety information 4
3 Product description 5
4 Correct use 6
5 Actuator assignment for 2/2-way valves 7
6 Actuator assignment for multi-port valves 7
7 Order data 8
8 Technical data 10
9 Dimensions 14
10 Manufacturer's information 27
10.1 Delivery 27
10.2 Packaging 27
10.3 Transport 27
10.4 Storage 27
11 Installation in piping 27
11.1 Preparing for installation 27
11.2 Installation with inserts for solvent cementing . 28
11.3 Installation with inserts for welding 29
11.4 Installation with screw-type inserts 29
11.5 Installation with flanged connection 30
11.6 Fixing the mounting kit onto the actuator and body 30
12 Commissioning 31
13 Operation 31
14 Troubleshooting 33
15 Inspection and maintenance 34
15.4 Cleaning the product 39
16 Removal from piping 39
17 Disposal 39
18 Returns 39
19 Declaration of Incorporation according to 2006/42/EC (Machinery Directive) 40
20 Declaration of conformity according to 2014/68/EU (Pressure Equipment Directive) 41
21 EU Declaration of conformity 2-way ball valve 42
22 EU Declaration of conformity 3-way ball valve 43

1 General information

1.1 Information

- The descriptions and instructions apply to the standard versions. For special versions not described in this document the basic information contained herein applies in combination with any additional special documentation.
- Correct installation, operation, maintenance and repair work ensure faultless operation of the product.
- Should there be any doubts or misunderstandings, the German version is the authoritative document.
- Contact us at the address on the last page for staff training information.

1.2 Symbols used

The following symbols are used in this document:

Symbol	Meaning
●	Tasks to be performed
▶	Response(s) to tasks
–	Lists

1.3 Definition of terms

Working medium

The medium that flows through the GEMÜ product.

Control medium

The medium whose increasing or decreasing pressure causes the GEMÜ product to be actuated and operated.

Control function

The possible actuation functions of the GEMÜ product.

1.4 Warning notes

Wherever possible, warning notes are organised according to the following scheme:

SIGNAL WORD	
Possible symbol for the specific danger	Type and source of the danger ▶ Possible consequences of non-observance. ● Measures for avoiding danger.

Warning notes are always marked with a signal word and sometimes also with a symbol for the specific danger.

The following signal words and danger levels are used:

⚠ DANGER

Imminent danger!

▶ Non-observance can cause death or severe injury.

⚠ WARNING

Potentially dangerous situation!

▶ Non-observance can cause death or severe injury.

⚠ CAUTION

Potentially dangerous situation!

▶ Non-observance can cause moderate to light injury.

NOTICE

Potentially dangerous situation!

▶ Non-observance can cause damage to property.

The following symbols for the specific dangers can be used within a warning note:

Symbol	Meaning
	Danger of explosion
	Corrosive chemicals!
	Hot plant components!

2 Safety information

The safety information in this document refers only to an individual product. Potentially dangerous conditions can arise in combination with other plant components, which need to be considered on the basis of a risk analysis. The operator is responsible for the production of the risk analysis and for compliance with the resulting precautionary measures and regional safety regulations.

The document contains fundamental safety information that must be observed during commissioning, operation and maintenance. Non-compliance with these instructions may cause:

- Personal hazard due to electrical, mechanical and chemical effects.
- Hazard to nearby equipment.
- Failure of important functions.
- Hazard to the environment due to the leakage of dangerous materials.

The safety information does not take into account:

- Unexpected incidents and events, which may occur during installation, operation and maintenance.

– Local safety regulations which must be adhered to by the operator and by any additional installation personnel.

Prior to commissioning:

1. Transport and store the product correctly.
2. Do not paint the bolts and plastic parts of the product.
3. Carry out installation and commissioning using trained personnel.
4. Provide adequate training for installation and operating personnel.
5. Ensure that the contents of the document have been fully understood by the responsible personnel.
6. Define the areas of responsibility.
7. Observe the safety data sheets.
8. Observe the safety regulations for the media used.

During operation:

9. Keep this document available at the place of use.
10. Observe the safety information.
11. Operate the product in accordance with this document.
12. Operate the product in accordance with the specifications.
13. Maintain the product correctly.
14. Do not carry out any maintenance work and repairs not described in this document without consulting the manufacturer first.

In cases of uncertainty:

15. Consult the nearest GEMÜ sales office.

3 Product description

3.1 Construction

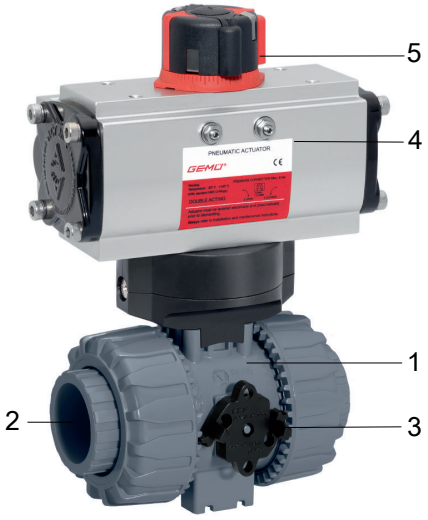

Item	Name	Material
1	Ball valve body	PVC-U, PVC-C, ABS, PP-H, PVDF
2	Pipe connections	PVC-U, PVC-C, ABS, PP-H, PVDF
3	Anti-twist protection	POM
4	Actuator housing	Aluminium
5	Position indicator	PP
	Ball valve seals	FPM, EPDM, FFKM
	Ball valve seat seals	PTFE

3.2 Description

The 2/2 and/or 3/2-way GEMÜ 710 plastic ball valve has a pneumatic actuator, which can either be made from aluminium or plastic. The seat seal is made from PTFE and the O-ring seals can be made from either EPDM or FKM.

3.3 Function

The product is a 2/2 or 3/2-way plastic ball valve. It has a low maintenance pneumatic actuator. It has a low maintenance pneumatic quarter turn actuator providing rotation through 90°. The actuator has an optical position indicator as standard.

The threaded connection locking device enables the unions to be locked in place.

The ball valve body and the seal material are available in various designs as shown in the datasheet.

3.4 Port positions

The port position can be variably adjusted by the customer. The actuator must be removed in order to do this. The shaft extension of the mounting kit can be turned in any number of 90° increments, allowing for a customized port position. A tool with an appropriate wrench size is required to turn the shaft extension. This tool is not included in the scope of delivery. Once the desired adjustment has been made to the port position, the actuator can be refitted.

3.4.1 T-port

	CLOSED end position	OPEN end position	Condition as supplied to customer OPEN
Delivery condition			
Code T	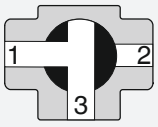	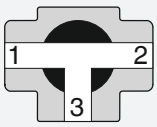	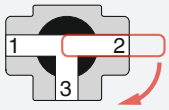
Optional port positions, can be user adjusted			
Code 2	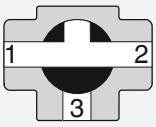	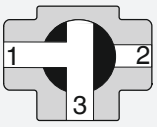	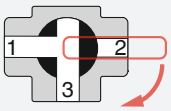
Code 3	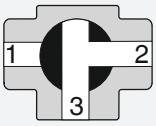	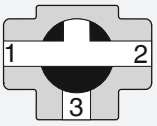	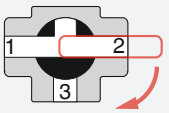
Code 4	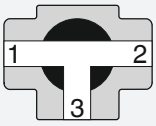	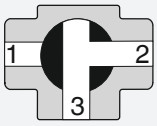	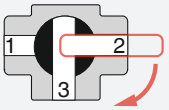

3.4.2 L-port

	CLOSED end position	OPEN end position	Condition as supplied to customer OPEN
Delivery condition			
Code L	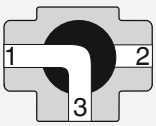	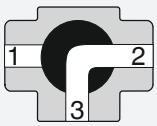	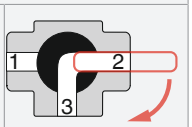
Optional port positions, can be user adjusted			
Code 6	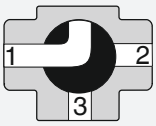	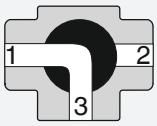	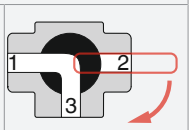

3.4.3 Control ball

	Control ball	Scale
Code R		

For 0°- 90° control range, linear control characteristic between port position and percentage flow rate.

NOTE: Ball configuration (R) cannot be retrofitted to standard 2/2-way bodies at a later date.

4 Correct use

⚠ DANGER

Danger of explosion

- ► Risk of death or severe injury.
- ● Do **not** use the product in potentially explosive zones.

⚠ WARNING

Improper use of the product

- ► Risk of severe injury or death.
- ► Manufacturer liability and guarantee will be void.
- ● Only use the product in accordance with the operating conditions specified in the contract documentation and in this document.

The product is designed for installation in piping systems and for controlling a working medium.

The product is not intended for use in potentially explosive areas.

The product is controlled via a pneumatic actuator.

- ● Use the product in accordance with the technical data.

5 Actuator assignment for 2/2-way valves

5.1 Metal actuator

Actuator assignment ADA / ASR					
DN	Double acting ADA	Code		Single acting ASR	Code
10	ADA0020UF03F05YS09A	BU02AN0		ASR0020US08 F04YS14/S11A 1	AU02FN0
10	ADA0020UF03F05YS09A	BU02AN0		ASR0020US08 F04YS14/S11A 1	AU02FN0
20	ADA0020UF03F05YS09A	BU02AN0		ASR0020US08 F04YS14/S11A 1	AU02FN0
25	ADA0020UF03F05YS09A	BU02AN0		ASR0020US08 F04YS14/S11A 1	AU02FN0
32	ADA0020UF03F05YS09A	BU02AN0		ASR0040US14 F05YS14/S11A 1	AU04KB0
40	ADA0020UF03F05YS09A	BU02AN0		ASR0040US14 F05YS14/S11A 1	AU04KB0
50	ADA0040UF05YS14/S11A	BU04AB0		ASR0080US14 F05F07YS17/S14A 1	AU08KC0
65	ADA0040UF05YS14/S11A	BU04AB0		ASR0130US14 F05F07YS17/S14A 1	AU13KC0
80	ADA0080UF05F07YS17/S14A	BU08AC0		ASR0130US14 F05F07YS17/S14A 1	AU13KC0
100	ADA0080UF05F07YS17/S14A	BU08AC0		ASR0200US14F07F10YS17/S14A 1	AU20KE0

Actuator assignment DR / SC					
DN	Double acting DR	Code		Single acting SC	Code
10	DR0015U F03F05NS11A 2	DU01AW0		SC0015U 8F03F05NS11A 1	SU01KW0
15	DR0015U F03F05NS11A 2	DU01AW0		SC0015U 8F03F05NS11A 1	SU01KW0
20	DR0015U F03F05NS11A 2	DU01AW0		SC0015U 8F03F05NS11A 1	SU01KW0
25	DR0015U F03F05NS11A 2	DU01AW0		SC0015U 8F03F05NS11A 1	SU01KW0
32	DR0015U F03F05NS11A 2	DU01AW0		SC0030U 6F05F07NS14A 1	SU03KP0
40	DR0015U F03F05NS11A 2	DU01AW0		SC0060U 6F05F07NS14A 1	SU06KP0
50	DR0030U F05F07NS14A 2	DU03AP0		SC0060U 6F05F07NS14A 1	SU06KP0
65	DR0030U F05F07NS14A 2	DU03AP0		SC0100U 6F05F07NS17A 1	SU10KC0
80	DR0060U F05F07NS14A 2	DU06AP0		SC0100U 6F05F07NS17A 1	SU10KC0
100	DR0060U F05F07NS17A 2	DU06AC0		SC0220U 6F07F10NS22A 1	SU22KD0

5.2 Plastic actuator

	Normally closed	Double acting
	Actuator size code [1]	
DN 15	0	0
DN 20	0	0
DN 25	1	1
DN 32	1	1
DN 40	1	1
DN 50	1	1
DN 65	-	1

1) **Actuator version**
Code 0: GEMÜ actuator, pneumatic, size 0, piston diameter 50 mm
Code 1: GEMÜ actuator, pneumatic, size 1, piston diameter 70 mm

6 Actuator assignment for multi-port valves

Please contact GEMÜ for the actuator assignment of multi-port valves.

7 Order data

The order data provide an overview of standard configurations.

Please check the availability before ordering. Other configurations available on request.

Order codes

1 Type	Code
Ball valve, plastic, pneumatically operated	710

2 DN	Code
DN 10	10
DN 15	15
DN 20	20
DN 25	25
DN 32	32
DN 40	40
DN 50	50
DN 65	65
DN 80	80
DN 100	100

3 Body configuration	Code
2/2-way body	D
Multi-port version	M

4 Connection type	Code
Union end with insert (solvent cement or weld socket) - DIN	2
Union end with flange EN 1092, PN 10, form B, face-to-face dimension FTF EN 558 series 1, ISO 5752, basic series 1	4
Union end with inch insert - BS (socket)	33
Union end with flange ANSI Class 125/150 RF	39
Union end with inch insert – ASTM (socket)	3M
Union end with JIS insert (socket)	3T
Union end with insert (for IR butt welding) - DIN	78
Union end with insert (Rp threaded socket) - DIN	7R

5 Ball valve material	Code
PVC-U, grey	1
PVC-C	2
PVDF	20
ABS	4
PP-H, grey	5

6 Seal material	Code
FKM	4
EPDM	14
FFKM	F5

7 Control function	Code
Normally closed (NC)	1
Normally open (NO)	2

7 Continuation of Control function	Code
Double acting (DA)	3

8 Actuator version	Code
Actuator GEMÜ ADA and ASR	
Actuator, pneumatic, single acting, clockwise rotation, spring closing, ASR0020US08F03/05 S09	AU02FN
Actuator, pneumatic, single acting, clockwise rotation, spring closing, ASR0040US14F05 S14S11	AU04KB
Actuator, pneumatic, single acting, clockwise rotation, spring closing, ASR0130US14F05/07S17S14	AU13KC
Actuator, pneumatic, single acting, clockwise rotation, spring closing, ASR0200US14F07/10S17S14	AU20KE
Actuator, pneumatic, double acting, clockwise rotation, ADA0020U F03/05 S09	BU02AN
Actuator, pneumatic, double acting, clockwise rotation, ADA0040U F05 S14S11	BU04AB
Actuator, pneumatic, double acting, clockwise rotation, ADA0080U F05/07S17S14	BU08AC
Actuator GEMÜ DR and SC	
Actuator, pneumatic, double acting, clockwise rotation, DR0015U F03/05 S11	DU01AW
Actuator, pneumatic, double acting, clockwise rotation, DR0030U F05/07 S14	DU03AP
Actuator, pneumatic, double acting, clockwise rotation, DR0060U F05/07 S14	DU06AP
Actuator, pneumatic, single acting, clockwise rotation, spring closing, SC0015U 6F03/05 S11	SU01KW
Actuator, pneumatic, single acting, clockwise rotation, spring closing, SC0030U 6F04 S11	SU03KO
Actuator, pneumatic, single acting, clockwise rotation, spring closing, SC0060U 6F05/07 S14	SU06KP
Actuator, pneumatic, single acting, clockwise rotation, spring closing, SC0100U 6F05/07S17D11	SU10KC

8 Continuation of Actuator version	Code
Actuator, pneumatic, single acting, clockwise rotation, spring closing, SC0220U 6F07/10 S22	SU22KD
Actuator GEMÜ 9415	
GEMÜ actuator, pneumatic, size 0, piston diameter 50 mm	0
GEMÜ actuator, pneumatic, size 1, piston diameter 70 mm	1

9 Actuator particulars	Code
Gen. industrial version, body alu, anodising layer 25-35µm, end caps alu, powder coated, shaft C steel + ENP, bolts A2	0

10 Ball config./port position	Code
2/2-way body	
R ball (control ball) for 0°- 90° control range linear control characteristic between port position and percentage flow rate	R
Multi-port version	
L-port, standard end position "Open", connection 2 and 3 open, L-port, standard end position "Closed", connection 1 and 3 open	L

10 Continuation of Ball config./port position	Code
T-port, standard end position "Open", connection 1, 2 and 3 open, T-port, standard end position "Closed", connection 1 and 3 open	T
T-port, end position "Open", connection 1 and 3 open, T-port, end position "Closed", connection 1 and 2 open	2
T-port, end position "Open", connection 1 and 2 open, T-port, end position "Closed", connection 2 and 3 open	3
T-port, end position "Open", connection 2 and 3 open, T-port, end position "Closed", connection 1, 2 and 3 open	4
L-port, end position "Open", connection 1 and 3 open, L-port, end position "Closed", connection 1 open	6

11 Type of design	Code
Without	
Insert in PE	1187

12 CONEXO	Code
without	
Integrated RFID chip for electronic identification and traceability	C

Order example

Order option	Code	Description
1 Type	710	Ball valve, plastic, pneumatically operated
2 DN	15	DN 15
3 Body configuration	M	Multi-port version
4 Connection type	33	Union end with inch insert - BS (socket)
5 Ball valve material	1	PVC-U, grey
6 Seal material	14	EPDM
7 Control function	3	Double acting (DA)
8 Actuator version	BU02AN	Actuator, pneumatic, double acting, clockwise rotation, ADA0020U F03/05 S09
9 Actuator particulars	0	Gen. industrial version, body alu, anodising layer 25-35µm, end caps alu, powder coated, shaft C steel + ENP, bolts A2
10 Ball config./port position	L	L-port, standard end position "Open", connection 2 and 3 open, L-port, standard end position "Closed", connection 1 and 3 open
11 Type of design		Without
12 CONEXO		without

8 Technical data

8.1 Medium

Working medium: Corrosive, inert, gaseous and liquid media and steam which have no negative impact on the physical and chemical properties of the body and seal material.

Control medium: Inert gases

8.2 Temperature

Medientemperatur: see Pressure / temperature diagram

Seal material: FPM: -15 – 210 °C
EPDM: -20 – 95 °C

Umgebungstemperatur: Valve body ABS: -20 to 60 °C

Valve body PP-H: 5 to 60 °C

Valve body PVC-U, PVC-C: 10 to 50 °C

Valve body PVDF: -5 to 50 °C

8.3 Pressure

Operating pressure: Pressure / temperature diagram

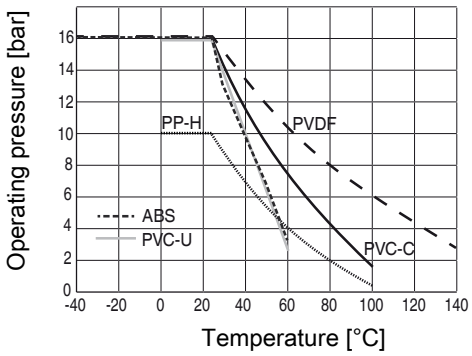

Data for extended temperature ranges on request. Please note that the ambient temperature and media temperature generate a combined temperature at the valve body which must not exceed the above values.

Control pressure: 2 to 8 bar (depending on version and/or control function)

Kv values:

DN	Body configuration						
	2/2-way		Multi-port (code M)				
	(code D)	(code R)	T-port	T-port	T-port	T-port	L-port
	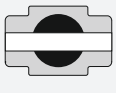	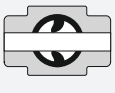	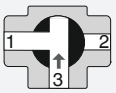	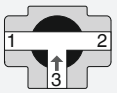	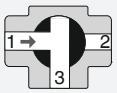	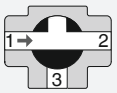	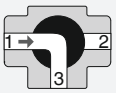
10	4.8	4.98	2.2	1.5	2.4	4.7	2.9
15	12.0	5.28	3.3	2.1	3.9	11.7	4.4
20	23.1	8.10	8.1	5.7	8.7	22.8	9.0
25	46.2	15.36	12.3	8.4	14.7	45.6	15.9
32	66.0	28.68	23.4	16.2	27.6	63.0	28.5
40	105.0	35.52	28.5	19.8	36.0	102.0	37.2
50	204.0	64.08	54.0	37.2	72.0	192.0	73.2
65	315.0	-	-	-	-	-	-
80	426.0	-	-	-	-	-	-
100	570.0	-	-	-	-	-	-

Kv values in m³/h

Control diagram:

with control ball (code R)

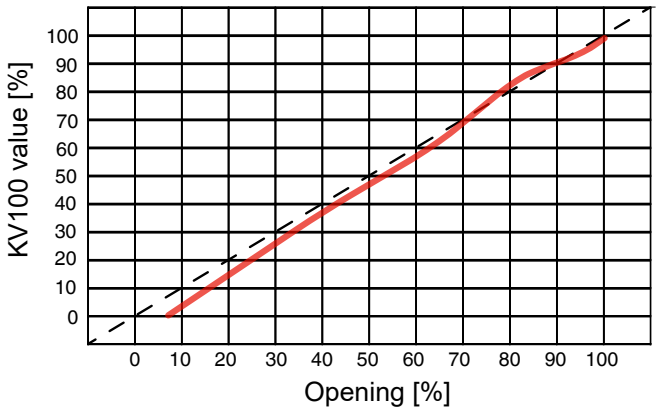

For 0°- 90° control range, linear control characteristic between port position and percentage flow rate.

NOTE: Ball configuration (R) cannot be retrofitted to standard 2/2-way bodies at a later date.

8.4 Mechanical data

Torques:

DN	2/2-way code D				Multi-port code M		
	PN 6	PN 10	PN 16		PN 10		PN 16
	Material code [1]						
	1, 2, 4, 5, 20	5	1, 2, 20	4	1, 2	5	1, 2
10	-	2.4	3.6	3.0	-	-	-
15	-	2.4	3.6	3.0	2.4	2.4	3.6
20	-	3.6	4.0	4.0	3.6	3.6	4.8
25	-	4.8	6.0	6.0	5.0	5.0	5.4
32	-	7.2	7.2	7.2	7.2	7.2	11.5
40	-	8.6	10.0	10.0	9.6	10.0	14.8
50	-	12.4	16.0	16.0	14.8	14.8	23.3
65	20.0	25.0	30.0	30.0	-	-	-
80	25.0	35.0	45.0	45.0	-	-	-
100	40.0	55.0	65.0	65.0	-	-	-

Torques in Nm

1) **Ball valve material**
Code 1: PVC-U, grey
Code 2: PVC-C
Code 4: ABS
Code 5: PP-H, grey
Code 20: PVDF

Weight:

Ball valve

DN	Body configuration						
	2/2-way (code D)				Multi-port (code M)		
	Material code [1]						
	1, 2	4	5	20	1, 2, 4	5	20
10	215	160	150	291	-	-	-
15	205	160	145	272	310	207	390
20	330	265	218	445	550	353	669
25	438	345	298	584	790	498	952
32	693	550	480	938	1275	895	1501
40	925	730	682	1242	1660	1022	1959
50	1577	1280	1166	2187	2800	1945	3324
65	4380	4380	3090	4350	-	-	-
80	7200	7200	5080	7200	-	-	-
100	11141	11141	7725	11141	-	-	-

Weight in g

1) **Ball valve material**
Code 1: PVC-U, grey
Code 2: PVC-C
Code 4: ABS
Code 5: PP-H, grey
Code 20: PVDF

Actuator GEMÜ DR/SC

Type	0015U	0030U	0060U	0100U	0150U	0220U
DR	1.0	1.6	2.7	3.7	5.2	8.0
SC	1.1	1.7	3.1	4.3	6.1	9.3

Weights in kg

Weight:

Actuator GEMÜ ADA/ASR

Type	0020U	0040U	0080U	0130U	0200U
ADA	1.4	2.1	3.0	3.8	5.6
ASR	1.5	2.3	3.7	4.8	7.3

Weights in kg

Actuator GEMÜ 9415

Actuator 9415

Actuator size 0:	Control function 1:	435 g
	Control function 3:	325 g
Actuator size 1:	Control function 1:	1470 g
	Control function 3:	1100 g

9 Dimensions

9.1 Actuator dimensions

9.1.1 GEMÜ ADA/ASR

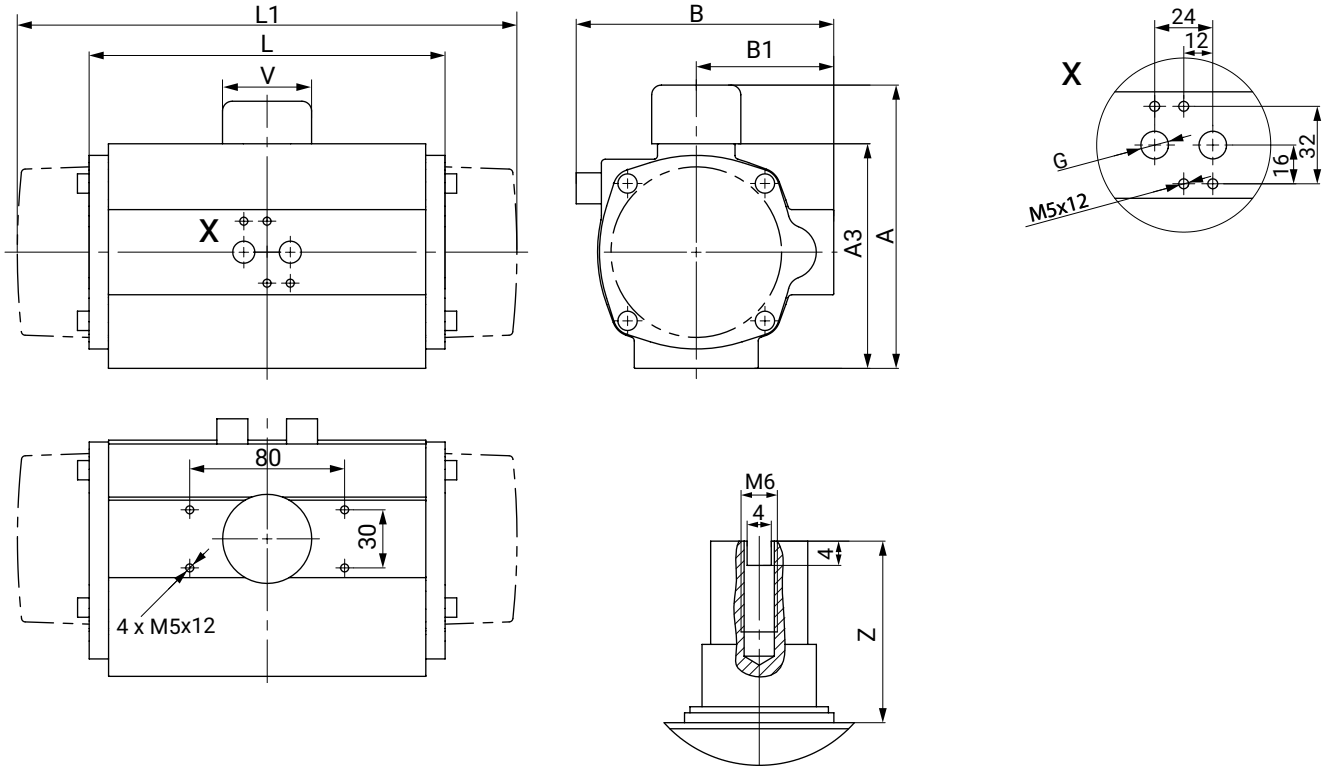

Typ	A	A3	B	B1	V	G	Z	L	L1
00010	76.0	46.0	56.0	33.0	46.0	G1/8"	30.0	-	100.0
0020U	96.0	66.0	76.0	48.0	40.0	G1/4"	30.0	145.0	163.0
0040U	115.0	85.0	91.0	56.0	40.0	G1/4"	30.0	158.0	195.0
0080U	137.0	107.0	111.0	66.0	40.0	G1/4"	30.0	177.0	217.0
0130U	147.0	117.0	122.0	71.0	40.0	G1/4"	30.0	196.0	258.0
0200U	165.0	135.0	135.5	78.0	40.0	G1/4"	30.0	225.0	299.0

Dimensions in inch

9.1.2 GEMÜ DR/SC

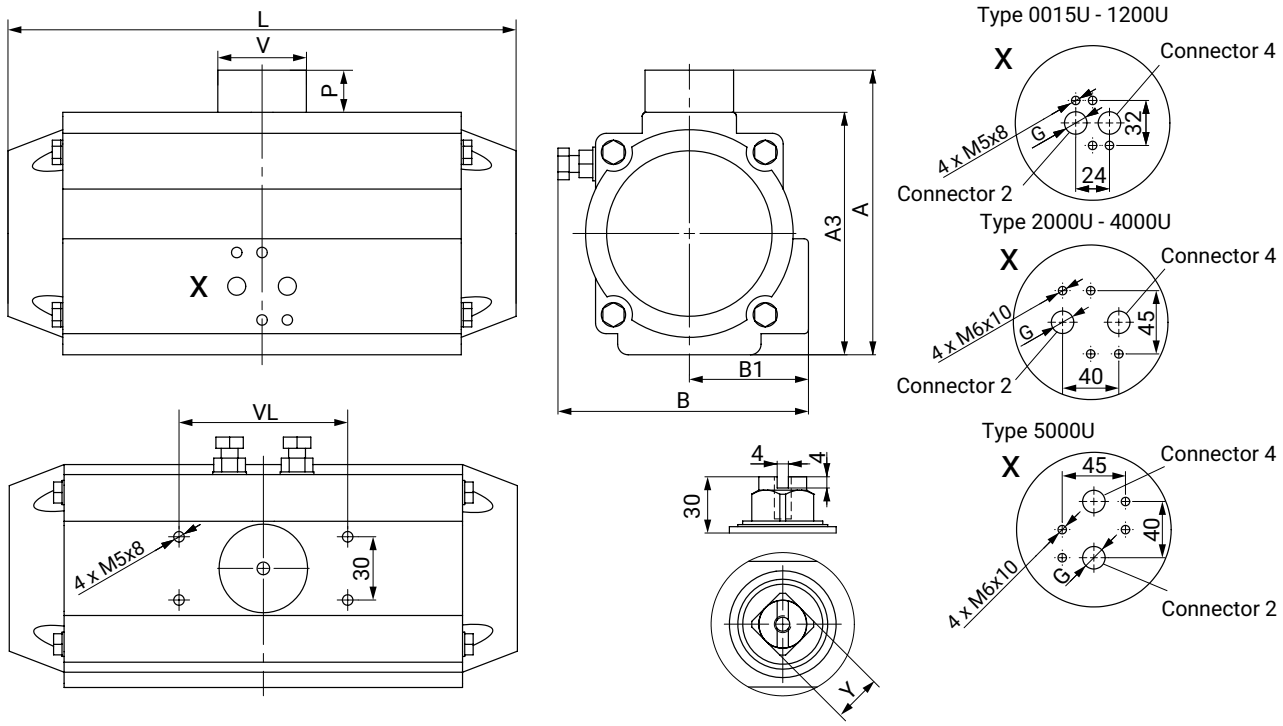

Type	A	A3	B	B1	V	VL	G	P	L	Y
0015U	89.0	69.0	72.0	43.0	42.0	80.0	G1/8"	20.0	136.0	11.0
0030U	105.0	85.0	84.5	48.5	42.0	80.0	G1/8"	20.0	153.5	11.0
0060U	122.0	102.0	93.0	50.5	42.0	80.0	G1/8"	20.0	203.5	17.0
0100U	135.0	115.0	106.0	56.5	42.0	80.0	G1/8"	20.0	241.0	17.0
0150U	147.0	127.0	118.5	63.0	42.0	80.0	G1/4"	20.0	259.0	17.0
0220U	175.0	145.0	136.0	72.0	58.0	80.0	G1/4"	30.0	304.0	27.0

Dimensions in inch

9.1.3 GEMÜ 9415

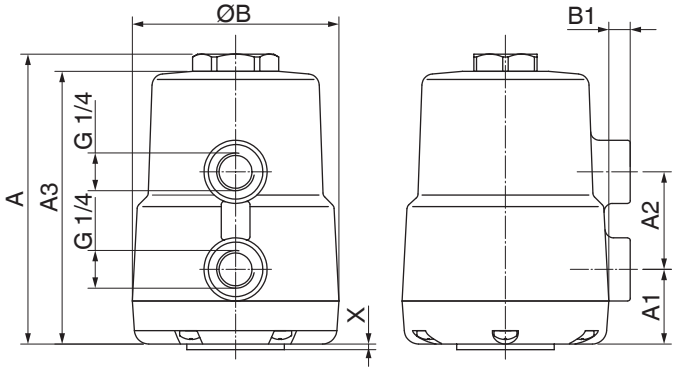

Actuator size	A	A1	A2	A3	ØB	B1	X
0	112.0	37.0	34.0	106.0	72.0	7.0	2.0
1	177.0	41.0	65.0	171.0	97.0	3.0	2.0

Dimensions in inch

9.2 Connection flange

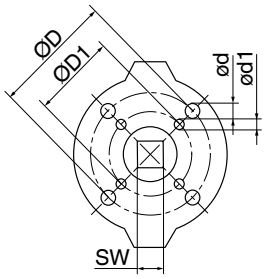

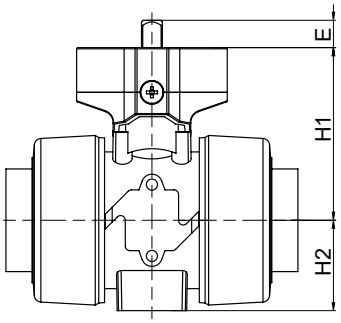

DN 10 - 50

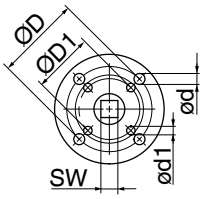

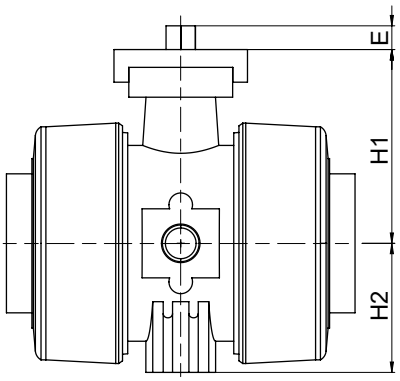

DN 65 - 100

DN	SW	E	H1	H2	ØD x ød	ØD1 x ød1
10	11.0	12.0	58.0	29.0	F03 x 5.5	F04 x 5.5
15	11.0	12.0	58.0	29.0	F03 x 5.5	F04 x 5.5
20	11.0	12.0	69.0	35.0	F03 x 5.5	F05 x 6.5
25	11.0	12.0	74.0	39.0	F03 x 5.5	F05 x 6.5
32	14.0	16.0	91.0	46.0	F05 x 6.5	F07 x 8.5
40	14.0	16.0	78.0	52.0	F05 x 6.5	F07 x 8.5
50	14.0	16.0	114.0	62.0	F05 x 6.5	F07 x 8.5
65	14.0	16.0	131.0	87.0	F07 x 9.0	F05 x 6.5
80	14.0	16.0	131.0	105.0	F07 x 9.0	F05 x 6.5
100	17.0	19.0	149.0	129.0	F07 x 9.0	F05 x 6.5

Dimensions in inch

9.3 Connection dimensions

00010, 0020U, 0040U, 0500U, 1750U, 2100U, 2500U

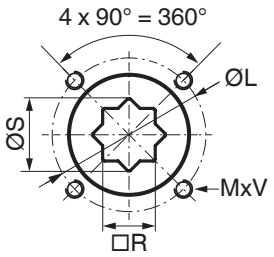

0020U, 0080U, 0130U, 0300U, 0850U, 1200U

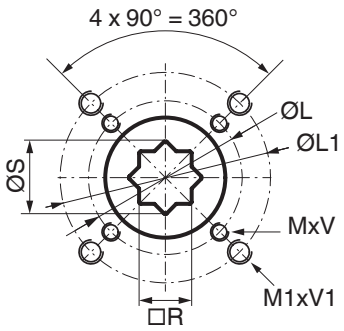

4000U

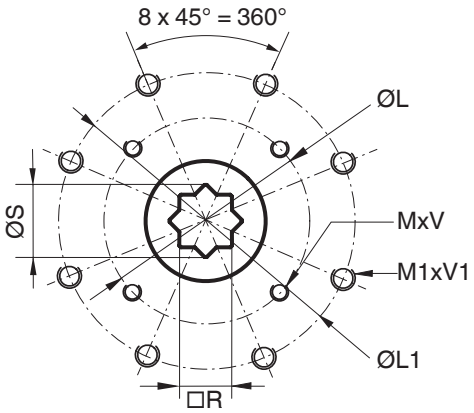

ISO 5211

Type	□R	ØS	ISO 5211	ØL	M x V	ISO 5211	ØL1	M1 x V1
00010	9.0	12.1	F03	36.0	M5 x 8.0	-	-	-
	9.0	12.1	F04	42.0	M5 x 8.0	-	-	-
0020U	9.0	12.5	F03	36.0	M5 x 8.0	F05	50.0	M6 x 10.0
	14.0	18.1	F04	42.0	M5 x 8.0	-	-	-
	14.0	18.1	F05	50.0	M6 x 10.0	-	-	-
0040U	14.0	18.1	F04	42.0	M5 x 10.0	-	-	-
	14.0	18.1	F05	50.0	M6 x 10.0	-	-	-
0080U	17.0	22.5	F05	50.0	M6 x 10.0	F07	70.0	M8 x 16.0
0130U	17.0	22.5	F05	50.0	M6 x 10.0	F07	70.0	M8 x 16.0
0200U	17.0	22.5	F07	70.0	M8 x 16.0	F10	102.0	M10 x 16.0
0300U	22.0	28.5	F07	70.0	M8 x 16.0	F10	102.0	M10 x 16.0

Dimensions in inch

9.4 Body dimensions

9.4.1 Valve body material PVC-U (code 1), body configuration D

Socket
connection type code 2, 33, 3M, 3T, 7R

DN 10 - 50

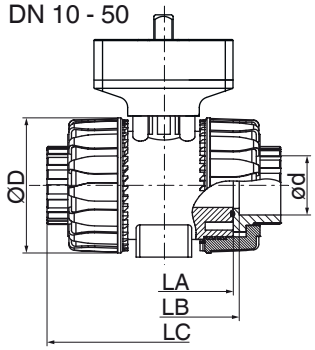

Connection type
code 3M

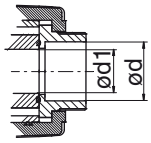

Flange
connection type code 4, 39

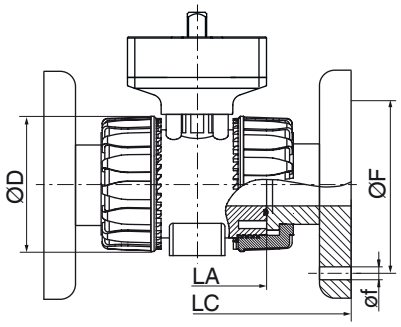

Butt weld spigot
connection type code 2 (PVDF), 78, 78*

DN 10 - 50

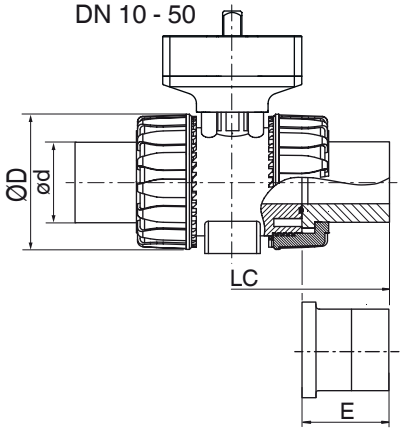

Connection type code [1]						4	39	78*	4	39	4	39	78*
DN	d	ød	ØD	A	LA	LC			øf		ØF		E
15	1/2"	20.0	54.0	40.0	65.0	130.0	143.0	175.0	14.0	15.9	65.0	60.3	55.0
20	3/4"	25.0	65.0	49.0	70.0	150.0	172.0	210.0	14.0	15.9	75.0	69.9	70.0
25	1"	32.0	73.0	49.0	78.0	160.0	187.0	226.0	14.0	15.9	85.0	79.4	74.0
32	1 ¼"	40.0	86.0	64.0	88.0	180.0	190.0	243.0	18.0	15.9	100.0	88.9	78.0
40	1 ½"	50.0	98.0	64.0	93.0	200.0	212.0	261.0	18.0	15.9	110.0	98.4	84.0
50	2"	63.0	122.0	76.0	111.0	230.0	234.0	293.0	18.0	19.1	125.0	120.7	91.0
65	2 ½"	75.0	164.0	175.0	133.0	290.0	290.0	356.0	17.0	18.0	145.0	139.7	111.0
80	3"	90.0	203.0	272.0	149.0	310.0	310.0	390.0	17.0	18.0	160.0	152.4	118.0
100	4"	110.0	238.0	330.0	167.0	350.0	350.0	431.0	17.0	18.0	180.0	190.5	132.0

Dimensions in inch

* Inserts according to valve body material,
special version: PE insert, design code 1187

1) **Connection type**
Code 4: Union end with flange EN 1092, PN 10, form B, face-to-face dimension FTF EN 558 series 1, ISO 5752, basic series 1
Code 39: Union end with flange ANSI Class 125/150 RF
Code 78: Union end with insert (for IR butt welding) - DIN

9.4.2 Valve body material PVC-U (code 1), body configuration D

Socket
connection type code 2, 33, 3M, 3T, 7R

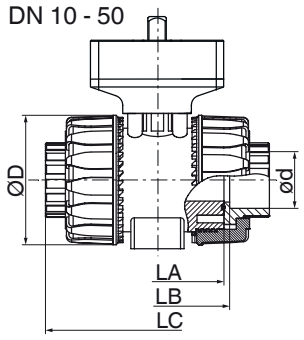

Connection type
code 3M

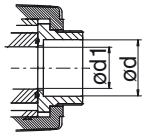

Flange
connection type code 4, 39

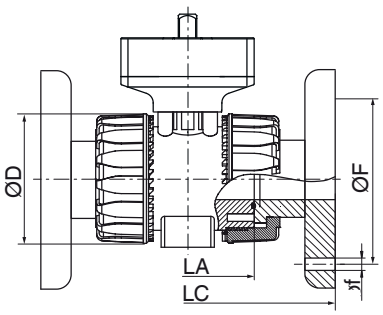

Butt weld spigot
connection type code 2 (PVDF), 78, 78*

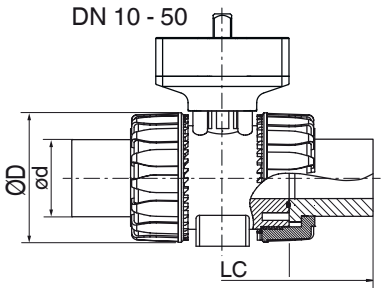

Connection type code [1]						2	33	3M	3T	7R	2	33	3M	3T	7R
DN	d	ød	ØD	A	LA	LB					LC				
10	3/8“	16.0	54.0	40.0	65.0	75.0	74.0	-	-	-	103.0	103.0	-	-	-
15	1/2“	20.0	54.0	40.0	65.0	71.0	70.0	72.0	71.0	80.0	103.0	103.0	117.0	131.0	110.0
20	3/4“	25.0	65.0	49.0	70.0	77.0	77.0	78.0	77.0	83.5	115.0	115.0	129.0	147.0	116.0
25	1“	32.0	73.0	49.0	78.0	84.0	83.0	84.6	84.0	96.0	128.0	128.0	142.0	164.0	134.0
32	1 ¼“	40.0	86.0	64.0	88.0	94.0	94.0	98.0	94.0	110.0	146.0	146.0	162.0	182.0	153.0
40	1 ½“	50.0	98.0	64.0	93.0	102.0	104.0	102.0	102.0	113.0	164.0	164.0	172.0	212.0	156.0
50	2“	63.0	122.0	76.0	111.0	123.0	127.0	122.6	122.0	134.5	199.0	199.0	199.0	248.0	186.0
65	2 ½“	75.0	164.0	175.0	133.0	147.0	147.0	146.0	145.0	174.5	235.0	235.0	235.0	267.0	235.0
80	3“	90.0	203.0	272.0	149.0	168.0	168.0	174.0	165.0	203.5	270.0	270.0	270.0	294.0	270.0
100	4“	110.0	238.0	330.0	167.0	186.0	182.0	193.0	202.0	229.5	308.0	308.0	308.0	370.0	308.0

Dimensions in inch

1) **Connection type**
Code 2: Union end with insert (solvent cement or weld socket) - DIN
Code 33: Union end with inch insert - BS (socket)
Code 3M: Union end with inch insert – ASTM (socket)
Code 3T: Union end with JIS insert (socket)
Code 7R: Union end with insert (Rp threaded socket) - DIN

9.4.3 Valve body material PVC-C (code 2), body configuration D

Socket
connection type code 2, 33, 3M, 3T, 7R

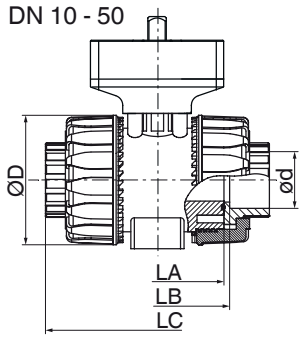

Connection type
code 3M

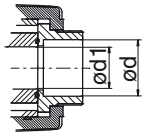

Flange
connection type code 4, 39

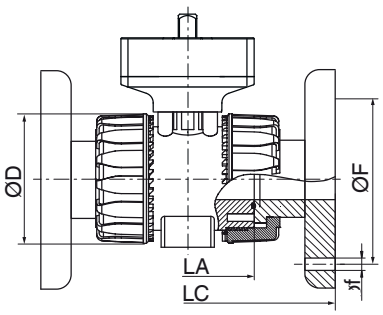

Butt weld spigot
connection type code 2 (PVDF), 78, 78*

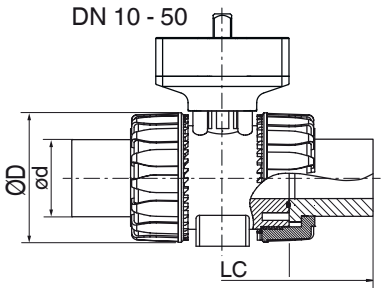

Connection type code [1]						2	3M	2	4	39	3M	4	39	4	39
DN	d	ød	øD	A	LA	LB		LC				øf		ØF	
10	3/8“	16.0	54.0	40.0	65.0	75.0	-	103.0	-	-	-	-	-	-	-
15	1/2“	20.0	54.0	40.0	65.0	71.0	72.0	103.0	130.0	143.0	117.0	14.0	15.9	65.0	60.3
20	3/4“	25.0	65.0	49.0	70.0	77.0	78.0	115.0	150.0	172.0	129.0	14.0	15.9	75.0	69.9
25	1“	32.0	73.0	49.0	78.0	84.0	84.6	128.0	160.0	187.0	142.0	14.0	15.9	85.0	79.4
32	1 ¼“	40.0	86.0	64.0	88.0	94.0	98.0	146.0	180.0	190.0	162.0	18.0	15.9	100.0	88.9
40	1 ½“	50.0	98.0	64.0	93.0	102.0	102.0	164.0	200.0	212.0	172.0	18.0	15.9	110.0	98.4
50	2“	63.0	122.0	76.0	111.0	123.0	122.6	199.0	230.0	234.0	199.0	18.0	19.1	125.0	120.7
65	2 ½“	75.0	164.0	175.0	133.0	147.0	146.0	235.0	290.0	290.0	235.0	17.0	18.0	145.0	139.7
80	3“	90.0	203.0	272.0	149.0	168.0	174.0	270.0	310.0	310.0	270.0	17.0	18.0	160.0	152.4
100	4“	110.0	238.0	330.0	167.0	186.0	193.0	308.0	350.0	350.0	308.0	17.0	18.0	180.0	190.5

Dimensions in inch

1) **Connection type**
Code 2: Union end with insert (solvent cement or weld socket) - DIN
Code 4: Union end with flange EN 1092, PN 10, form B, face-to-face dimension FTF EN 558 series 1, ISO 5752, basic series 1
Code 39: Union end with flange ANSI Class 125/150 RF
Code 3M: Union end with inch insert – ASTM (socket)

9.4.4 Valve body material ABS (code 4), body configuration D

Socket
connection type code 2, 33, 3M, 3T, 7R

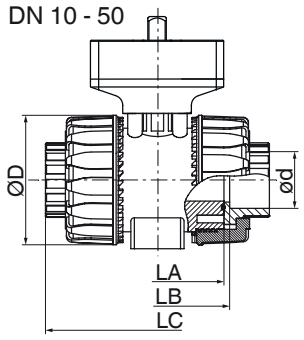

Connection type
code 3M

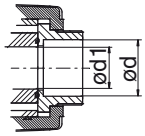

Flange
connection type code 4, 39

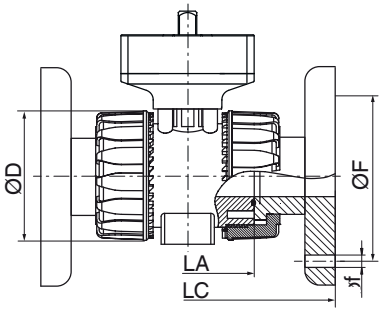

Butt weld spigot
connection type code 2 (PVDF), 78, 78*

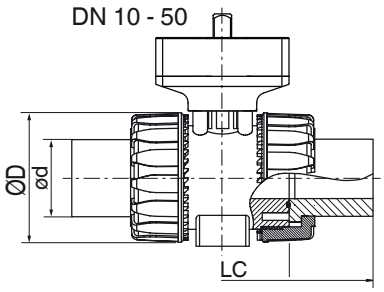

Connection type code [1]							2	7R	33	2, 33	7R
DN	d	ød	øD	A	LA	H	LB			LC	
10	3/8"	15.0	55.0	40.0	65.0	49.0	75.0	-	75.0	103.0	-
15	1/2“	20.0	55.0	40.0	65.0	49.0	71.0	80.0	71.0	103.0	110.0
20	3/4“	25.0	66.0	49.0	70.0	59.0	77.0	83.4	77.0	115.0	116.0
25	1“	32.0	75.0	49.0	78.0	66.0	84.0	95.8	84.0	128.0	134.0
32	1 ¼“	40.0	87.0	64.0	88.0	75.0	94.0	110.2	94.0	146.0	153.0
40	1 ½“	50.0	100.0	64.0	93.0	87.0	102.0	113.2	102.0	164.0	156.0
50	2“	63.0	122.0	76.0	111.0	101.0	123.0	134.6	123.0	199.0	186.0
65	2 ½“	75.0	164.0	175.0	133.0	164.0	147.0	-	147.0	235.0	-
80	3“	90.0	203.0	272.0	149.0	177.0	168.0	-	168.0	270.0	-
100	4“	110.0	238.0	330.0	167.0	195.0	186.0	-	186.0	308.0	-

Dimensions in inch

1) **Connection type**
Code 2: Union end with insert (solvent cement or weld socket) - DIN
Code 33: Union end with inch insert - BS (socket)
Code 7R: Union end with insert (Rp threaded socket) - DIN

9.4.5 Valve body material PP-H (code 5), body configuration D

Socket
connection type code 2, 33, 3M, 3T, 7R

DN 10 - 50

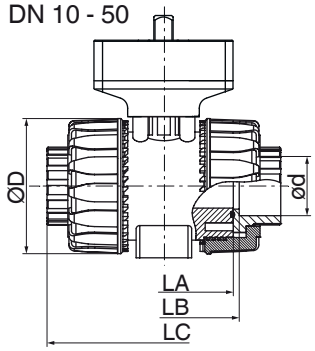

Connection type
code 3M

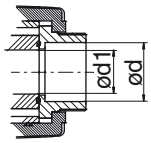

Flange
connection type code 4, 39

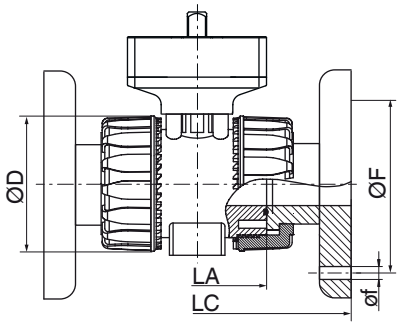

Butt weld spigot
connection type code 2 (PVDF), 78, 78*

DN 10 - 50

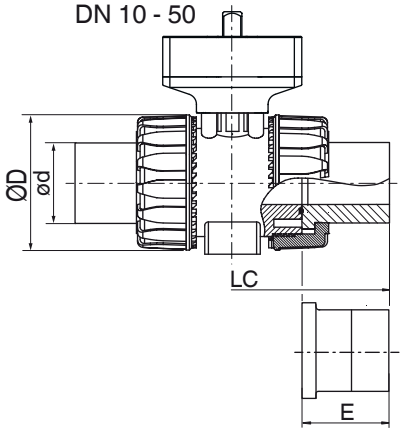

Connection type code [1]						2	7R	2	4	39	78/78 *	7R	78/78 *	4	39	4	39
DN	d	ød	øD	A	LA	LB		LC					E	øf		ØF	
10	3/8"	16.0	54.0	40.0	65.0	75.0	-	102.0	-	-	-	-	-	-	-	-	-
15	1/2"	20.0	54.0	40.0	65.0	73.0	80.0	102.0	130.0	143.0	175.0	110.0	55.0	14.0	15.9	65.0	60.3
20	3/4"	25.0	65.0	49.0	70.0	82.0	83.0	114.0	150.0	172.0	210.0	116.0	70.0	14.0	15.9	75.0	69.9
25	1"	32.0	73.0	49.0	78.0	90.0	96.0	126.0	160.0	187.0	226.0	134.0	77.0	14.0	15.9	85.0	79.4
32	1 ¼"	40.0	86.0	64.0	88.0	100.0	110.0	141.0	180.0	190.0	243.0	153.0	78.0	18.0	15.9	100.0	88.9
40	1 ½"	50.0	98.0	64.0	93.0	117.0	113.0	164.0	200.0	212.0	261.0	156.0	84.0	18.0	15.9	110.0	98.4
50	2"	63.0	122.0	76.0	111.0	144.0	134.0	199.0	230.0	234.0	293.0	186.0	91.0	18.0	15.9	125.0	120.7
65	2 ½"	75.0	164.0	175.0	133.0	153.0	-	213.0	290.0	290.0	356.0	-	111.0	17.0	18.0	145.0	139.7
80	3"	90.0	203.0	272.0	149.0	173.0	-	239.0	310.0	310.0	390.0	-	118.0	17.0	18.0	160.0	152.4
100	4"	110.0	238.0	330.0	167.0	199.0	-	268.0	350.0	350.0	431.0	-	132.0	17.0	18.0	180.0	190.5

Dimensions in inch

* Inserts according to valve body material,
special version: PE insert, design code 1187

1) **Connection type**
Code 2: Union end with insert (solvent cement or weld socket) - DIN
Code 4: Union end with flange EN 1092, PN 10, form B, face-to-face dimension FTF EN 558 series 1, ISO 5752, basic series 1
Code 39: Union end with flange ANSI Class 125/150 RF
Code 78: Union end with insert (for IR butt welding) - DIN
Code 7R: Union end with insert (Rp threaded socket) - DIN

9.4.6 Valve body material PVDF (code 20), body configuration D

Socket
connection type code 2, 33, 3M, 3T, 7R

DN 10 - 50

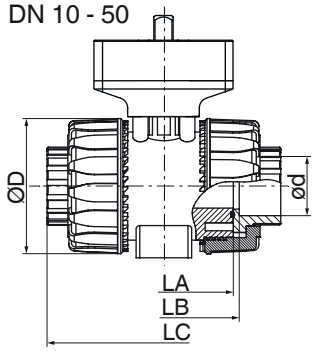

Connection type
code 3M

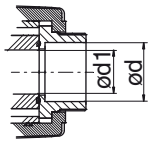

Flange
connection type code 4, 39

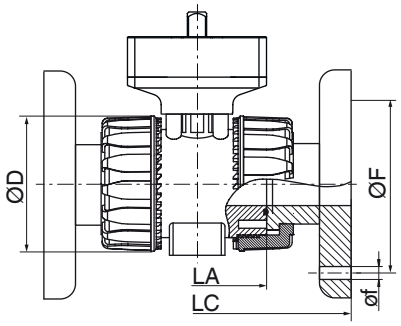

Butt weld spigot
connection type code 2 (PVDF), 78, 78*

DN 10 - 50

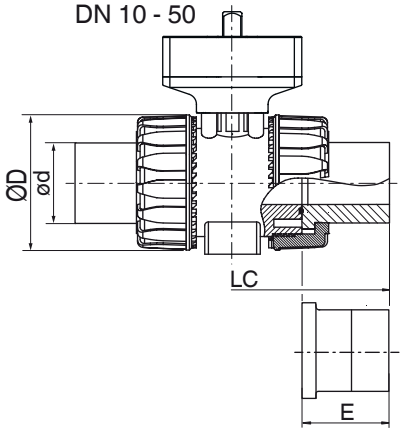

Connection type code [1]						2	2	4	78	4	39	4	39	78*
DN	d	ød	øD	A	LA	LB	LC			øf		ØF		E
10	-	16.0	54.0	40.0	65.0	74.5	102.0	-	-	-	-	-	-	-
15	1/2“	20.0	54.0	40.0	65.0	73.0	102.0	130.0	124.0	14.0	15.9	65.0	60.5	30.0
20	3/4“	25.0	65.0	49.0	70.0	82.0	114.0	150.0	144.0	14.0	15.9	75.0	70.0	37.0
25	1“	32.0	73.0	49.0	78.0	90.0	126.0	160.0	154.0	14.0	15.9	85.0	79.5	39.5
32	1 ¼“	40.0	86.0	64.0	88.0	100.0	141.0	180.0	174.0	18.0	15.9	100.0	89.0	44.5
40	1 ½“	50.0	98.0	64.0	93.0	117.0	164.0	200.0	194.0	18.0	15.9	110.0	98.5	51.5
50	2“	63.0	122.0	76.0	111.0	144.0	199.0	230.0	224.0	18.0	19.1	134.0	121.0	58.0
65	2 ½“	75.0	164.0	175.0	133.0	147.0	235.0	290.0	355.0	18.0	18.0	145.0	140.0	110.5
80	3“	90.0	203.0	272.0	149.0	173.0	239.0	310.0	389.0	18.0	18.0	160.0	152.5	118.5
100	4“	110.0	238.0	330.0	167.0	186.0	308.0	350.0	427.0	18.0	18.0	180.0	190.5	130.5

Dimensions in inch

* Inserts according to valve body material,
special version: PE insert, design code 1187

1) **Connection type**
Code 2: Union end with insert (solvent cement or weld socket) - DIN
Code 4: Union end with flange EN 1092, PN 10, form B, face-to-face dimension FTF EN 558 series 1, ISO 5752, basic series 1
Code 39: Union end with flange ANSI Class 125/150 RF
Code 78: Union end with insert (for IR butt welding) - DIN

9.4.7 Valve body material PVC-U (code 1), body configuration M

Connection type
code 2, 33, 3M, 3T, 7R

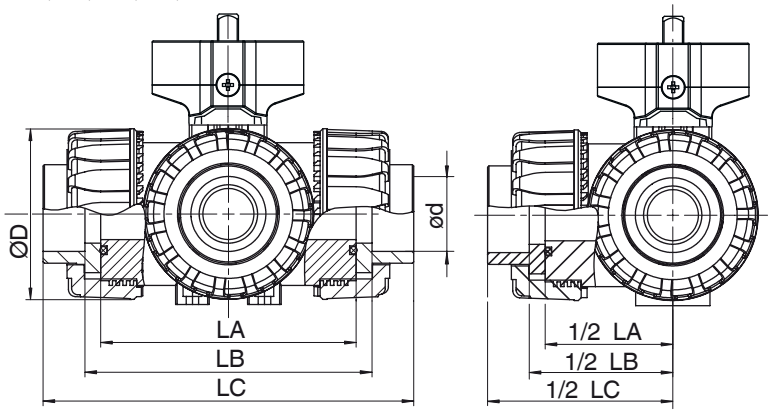

Connection type
code 78, 78*

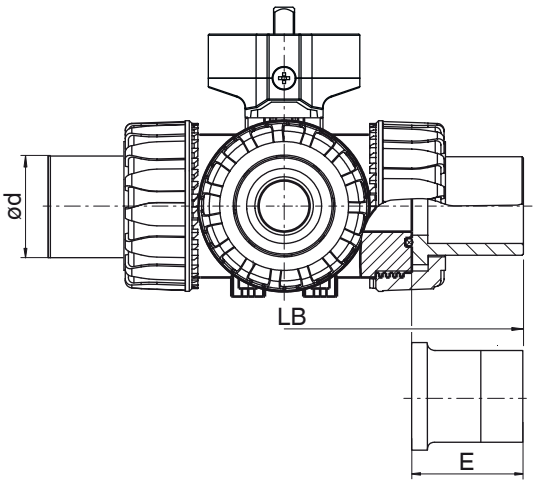

Connection type code [1]							33	3M	3T	7R	2, 33	3M	3T	7R	78*	78*
DN	d	ød	ØD	A	LA		LB				LC					E
10	3/8"	16.0	54.0	40.0	80.0	90.0	-	-	-	-	118.0	-	-	-	-	-
15	1/2"	20.0	54.0	40.0	80.0	86.0	85.0	87.2	86.0	95.0	118.0	132.2	146.0	125.0	190.0	55.0
20	3/4"	25.0	65.0	49.0	100.0	107.0	106.8	108.2	107.0	114.0	145.0	159.2	177.0	146.0	240.0	70.0
25	1"	32.0	73.0	49.0	110.0	116.0	115.0	116.6	116.0	129.0	160.0	174.0	196.0	166.0	258.0	74.0
32	1 ¼"	40.0	86.0	64.0	131.0	136.5	136.6	141.0	137.0	151.0	188.5	205.0	225.0	195.5	287.0	78.0
40	1 ½"	50.0	98.0	64.0	148.0	157.0	159.0	157.6	157.2	166.0	219.0	227.6	267.2	211.0	316.0	84.0
50	2"	63.0	122.0	76.0	179.0	190.5	194.2	190.6	190.0	199.0	266.5	267.0	316.0	253.5	361.0	91.0

Dimensions in inch

* Inserts according to valve body material,
special version: PE insert, design code 1187

1) **Connection type**
Code 2: Union end with insert (solvent cement or weld socket) - DIN
Code 33: Union end with inch insert - BS (socket)
Code 3M: Union end with inch insert – ASTM (socket)
Code 3T: Union end with JIS insert (socket)
Code 78: Union end with insert (for IR butt welding) - DIN
Code 7R: Union end with insert (Rp threaded socket) - DIN

9.4.8 Valve body material PVC-C (code 2), body configuration M

Connection type
code 2, 33, 3M, 3T, 7R

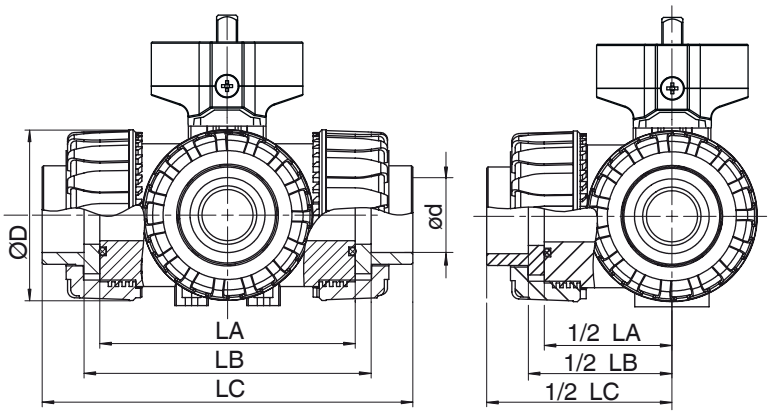

Connection type code [1]						2	3M	2	3M
DN	d	ød	ØD	A	LA	LB		LC	
10	3/8"	16.0	54.0	40.0	80.0	90.0	-	118.0	-
15	1/2"	20.0	54.0	40.0	80.0	86.0	87.2	118.0	132.2
20	3/4"	25.0	65.0	49.0	100.0	107.0	108.2	145.0	159.2
25	1"	32.0	73.0	49.0	110.0	116.0	116.6	160.0	174.0
32	1 ¼"	40.0	86.0	64.0	131.0	136.5	141.0	188.5	205.0
40	1 ½"	50.0	98.0	64.0	148.0	157.0	157.6	219.0	227.6
50	2"	63.0	122.0	76.0	179.0	190.5	190.6	266.5	267.0

Dimensions in inch

1) **Connection type**
Code 2: Union end with insert (solvent cement or weld socket) - DIN
Code 3M: Union end with inch insert – ASTM (socket)

9.4.9 Valve body material PP-H (code 5), body configuration M

Connection type
code 2, 33, 3M, 3T, 7R

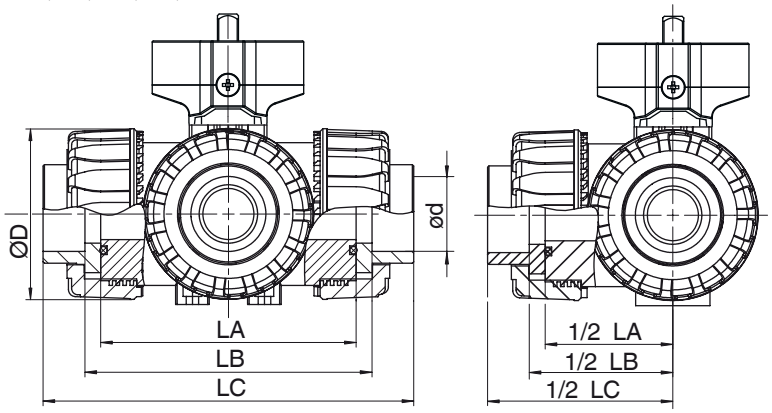

Connection type
code 78, 78*

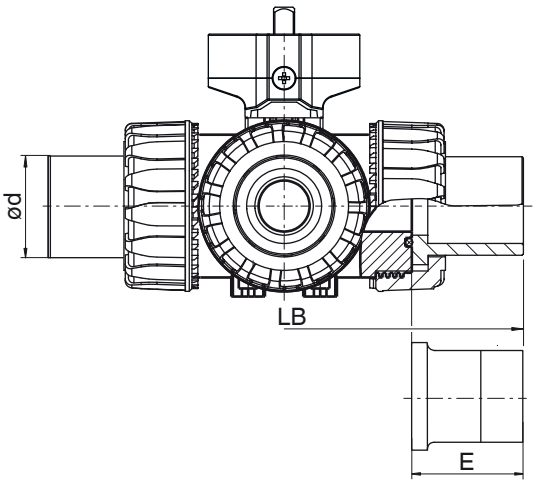

Connection type code [1]						2	7R	2	7R	78, 78*	78, 78*
DN	d	ød	ØD	A	LA	LB 1		LC			E
15	1/2“	20.0	54.0	40.0	80.0	88.0	87.0	117.0	117.0	190.0	55.0
20	3/4“	25.0	65.0	49.0	100.0	112.0	114.0	144.0	143.0	240.0	70.0
25	1“	32.0	69.5	49.0	110.0	122.0	120.0	158.0	157.0	258.0	74.0
32	1 ¼“	40.0	82.5	64.0	131.0	142.5	140.0	183.5	184.5	287.0	78.0
40	1 ½“	50.0	89.0	64.0	148.0	172.0	172.0	216.0	217.0	316.0	84.0
50	2“	63.0	108.0	76.0	179.0	211.5	211.0	266.5	265.5	361.0	91.0

Dimensions in inch

1) **Connection type**
Code 2: Union end with insert (solvent cement or weld socket) - DIN
Code 78: Union end with insert (for IR butt welding) - DIN
Code 7R: Union end with insert (Rp threaded socket) - DIN

10 Manufacturer's information

10.1 Delivery

- Check that all parts are present and check for any damage immediately upon receipt.

The product's performance is tested at the factory. The scope of delivery is apparent from the dispatch documents and the design from the order number.

10.2 Packaging

The product is packaged in a cardboard box which can be recycled as paper.

10.3 Transport

1. Only transport the product by suitable means. Do not drop. Handle carefully.
2. After the installation dispose of transport packaging material according to relevant local or national disposal regulations / environmental protection laws.

10.4 Storage

1. Store the product free from dust and moisture in its original packaging.
2. Avoid UV rays and direct sunlight.
3. Do not exceed the maximum storage temperature (see chapter "Technical data").
4. Do not store solvents, chemicals, acids, fuels or similar fluids in the same room as GEMÜ products and their spare parts.

11 Installation in piping

11.1 Preparing for installation

⚠ WARNING

The equipment is subject to pressure!

► Risk of severe injury or death.
- Depressurize the plant.
- Completely drain the plant.

⚠ WARNING

Corrosive chemicals!

► Risk of caustic burns.
- Wear suitable protective gear.
- Completely drain the plant.

⚠ CAUTION

Hot plant components!

► Risk of burns.
- Only work on plant that has cooled down.

⚠ CAUTION

Exceeding the maximum permissible pressure.

► Damage to the product.
- Provide precautionary measures against exceeding the maximum permitted pressures caused by pressure surges (water hammer).

⚠ CAUTION

Use as step.

► Damage to the product.
► Risk of slipping-off.
- Choose the installation location so that the product cannot be used as a foothold.
- Do not use the product as a step or a foothold.

NOTICE

Suitability of the product!

► The product must be appropriate for the piping system operating conditions (medium, medium concentration, temperature and pressure) and the prevailing ambient conditions.

NOTICE

Tools

► The tools required for installation and assembly are not included in the scope of delivery.
● Use appropriate, functional and safe tools.

1. Ensure the product is suitable for the relevant application.
2. Check the technical data of the product and the materials.
3. Keep appropriate tools ready.
4. Wear appropriate protective gear, as specified in the plant operator's guidelines.
5. Observe appropriate regulations for connections.
6. Have installation work carried out by trained personnel.
7. Shut off plant or plant component.
8. Secure plant or plant component against recommissioning.
9. Depressurize the plant or plant component.
10. Completely drain the plant (or plant component) and let it cool down until the temperature is below the media vaporization temperature and cannot cause scalding.
11. Correctly decontaminate, rinse and ventilate the plant or plant component.
12. Lay piping so that the product is protected against transverse and bending forces, and also from vibrations and tension.
13. Only install the product between matching aligned pipes (see chapters below).
14. Please note the flow direction (see chapter "Flow direction").
15. Please note the installation position (see chapter "Installation position").

11.2 Installation with inserts for solvent cementing

NOTICE

► The solvent cement is not included in the scope of delivery.
● Only use suitable solvent cement!

1. Carry out preparations for installation (see chapter "Preparing for installation").

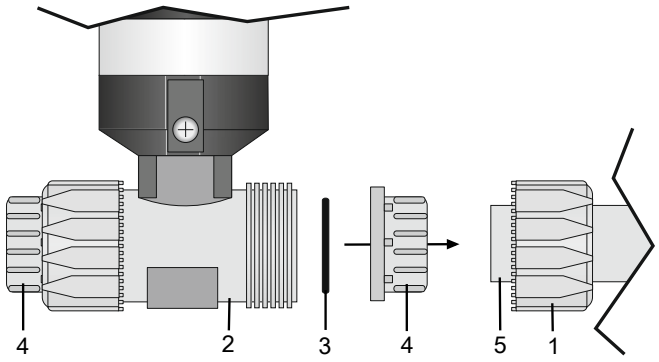

2. Unscrew the union nut **1** from the ball valve body **2**.
3. Reinsert the gasket **3** if necessary.

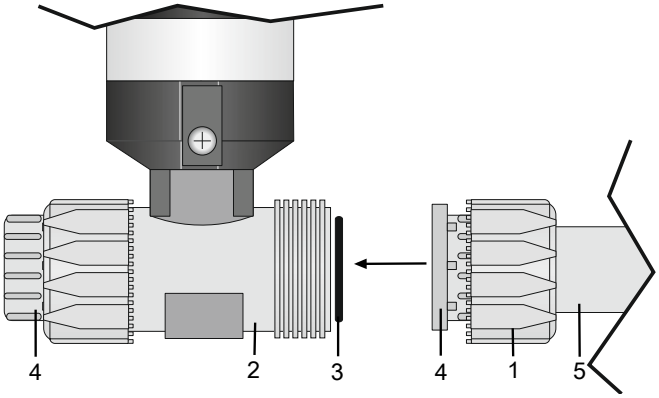

4. Push the union nut **1** over the piping **5**.
5. Prepare solvent cementing surfaces as specified by the solvent cement manufacturer.
6. Apply solvent cement on the inside of the insert **4** and on the outside of the piping **5** as specified by the solvent cement manufacturer.
7. Push the piping **5** into the insert **4**.
8. Screw the union nut **1** to the ball valve body **2** again.
9. Connect the other connections of the ball valve body **2** with the piping **5** in the same manner.

11.3 Installation with inserts for welding

1. Carry out preparations for installation (see chapter "Preparing for installation").
2. Adhere to good welding practices!

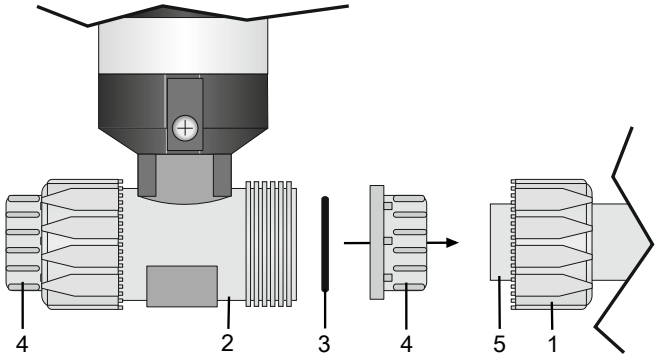

3. Unscrew the union nut **1** from the ball valve body **2**.
4. Reinsert the gasket **3** if necessary.

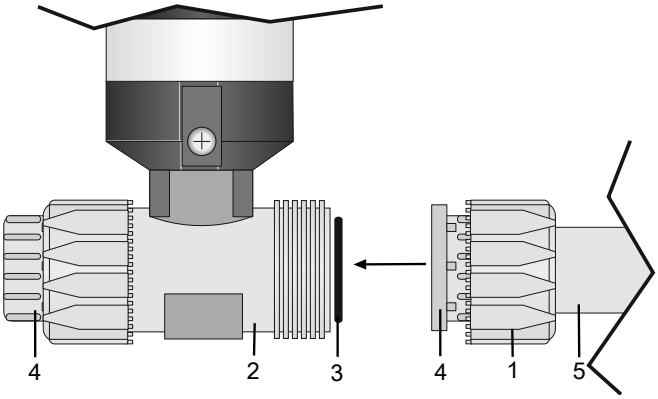

5. Push the union nut **1** over the piping **5**.
6. Push the piping **5** into the insert **4**.
7. Weld the piping **5** to the insert **4** with a suitable welding method and appropriate welding parameters and allow to cool down.
8. Screw the union nut **1** to the ball valve body **2** again.
9. Connect the other connections of the ball valve body **2** with the piping **5** in the same manner.

11.4 Installation with screw-type inserts

NOTICE

Thread sealant

► The thread sealant is not included in the scope of delivery.

● Only use appropriate thread sealant.

1. Keep thread sealant ready.
2. Carry out preparations for installation (see chapter "Preparing for installation").

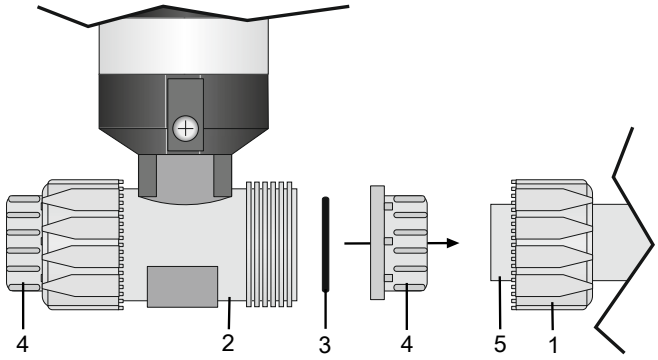

3. Unscrew the union nut **1** from the ball valve body **2**.
4. Reinsert the gasket **3** if necessary.

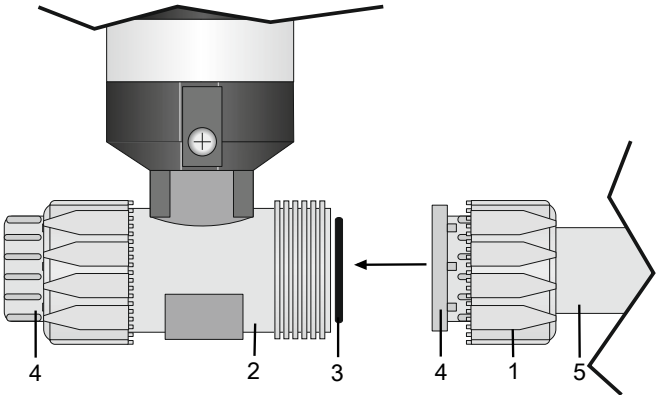

5. Push the union nut **1** over the piping **5**.
6. Apply thread sealant on connection thread.
7. Screw the insert **4** into the piping **5**.
8. Screw the union nut **1** to the ball valve body **2** again.
9. Connect the other connections of the ball valve body **2** with the piping **5** in the same manner.

11.5 Installation with flanged connection

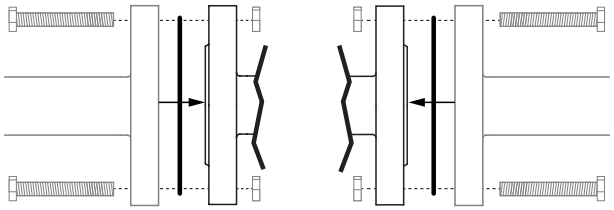

Fig. 1: Flanged connection

NOTICE

Sealing material

► The sealing material is not included in the scope of delivery.

● Only use appropriate sealing material.

NOTICE

Connector elements

► The connector elements are not included in the scope of delivery.

● Only use connector elements made of approved materials.

● Observe permissible tightening torque of the bolts.

1. Keep sealing material ready.
2. Carry out preparations for installation (see chapter "Preparing for installation").
3. Ensure clean, undamaged sealing surfaces on the connection flanges.
4. Align flanges carefully before installing them.
5. Clamp the product centrally between the piping with flanges.
6. Centre the gaskets.
7. Connect the valve flange and the piping flange using appropriate sealing materials and matching bolting.
8. Use all flange holes.
9. Tighten the bolts diagonally.
10. Re-attach or reactivate all safety and protective devices.

11.6 Fixing the mounting kit onto the actuator and body

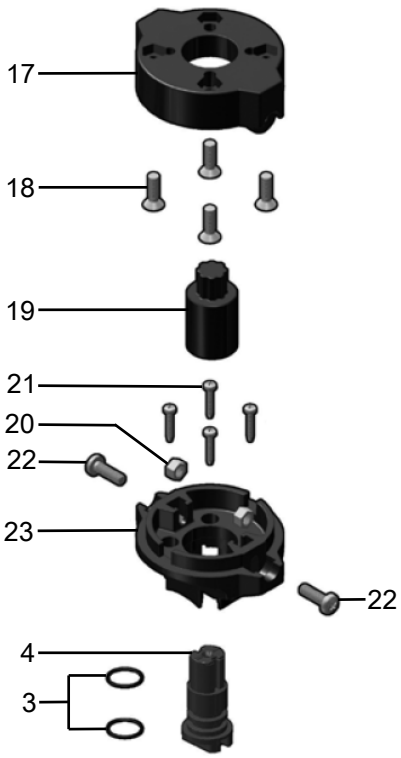

1. Use the bolts **18** to fit the cover of mounting kit **17** onto the actuator.
2. Use the bolts **21** to fit the base of mounting kit **23** onto the body.
3. Push spindle adapter **19** onto the spindle of body **4**.
4. Push the actuator plus the mounted cover of mounting kit **17** onto the body plus the mounted base of mounting kit **23** and bolt together with bolts **22** and nuts **20**.

12 Commissioning

1. Check the tightness and the function of the product (close and reopen the product). Due to the setting behavior of elastomers, the bolts may need to be retightened following the installation and commissioning of the valve.
2. Flush the piping system of new plant and following repair work (the product must be fully open).
   ⇨ Harmful foreign matter has been removed.
   ⇨ The product is ready for use.
3. Commission the product.

13 Operation

13.1 Optical position indicator

The actuator has an optical position indicator which indicates the position of the actuator.

– Position indicator on the left: **OPEN**
– Position indicator on the right: **CLOSED**
– ------- Piping axis

ADA 00010

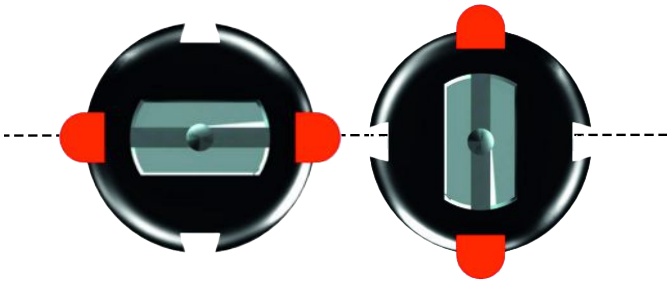

ADA / ASR 0020U - 0850U

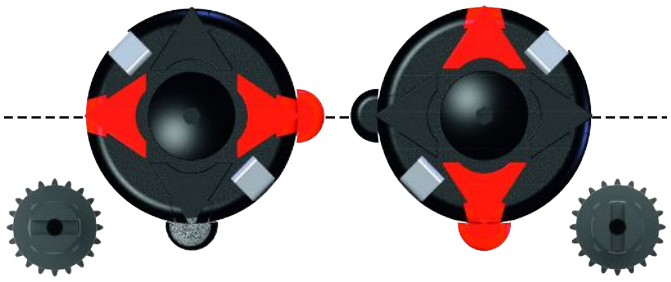

ADA / ASR 1200U - 4000U

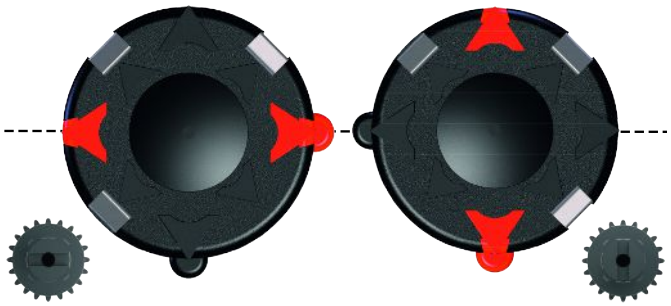

9415

The 9415 actuator is not fitted with a position indicator at the factory. A position indicator can be ordered as an option.

13.2 Setting the end positions

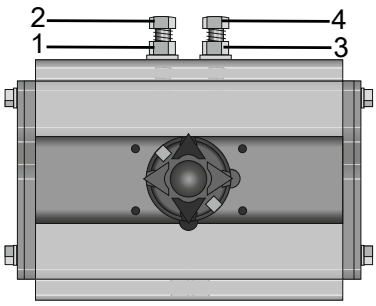

NOTICE

Setting the end positions

- Use an appropriate tool.
- Turn the bolts clockwise: angle becomes smaller.
- Turn the bolts anticlockwise: angle becomes larger.

ADA 00010:

The setting range for the end positions is ±2° (-2° to +2° / 88° to 92°).

Setting the 90° end position (±2°):

1. Move the actuator to the closed position.
2. Loosen the lock nut **1**.
3. Set the end position via screw **2**.
4. Tighten the lock nut **1**.

Setting the 0° end position (±2°):

5. Move the actuator to the open position.
6. Loosen the lock nut **3**.
7. Set the end position via screw **4**.
8. Tighten lock nut **3**.

All other ADA/ASR actuators:

The setting range for the end positions is ±5° (-5° to +5° / 85° to 95°).

Setting the 90° end position (±5°):

9. Move the actuator to the closed position.
10. Loosen the lock nut **1**.
11. Set the end position via screw **2**.
12. Tighten the lock nut **1**.

Setting the 0° end position (±5°):

13. Move the actuator to the open position.
14. Loosen the lock nut **3**.
15. Set the end position via screw **4**.
16. Tighten the lock nut **3**.

Using a stroke limiter (optional) enables the end positions to be set variably between 0° and 90° (not with ADA 00010 actuator).

Setting the 90° end position (±5°):

17. Move the actuator to the closed position.
18. Loosen the lock nut 1.
19. Set the end position via screw 2.
20. Tighten the lock nut 1.

Setting the 0° end position (±5°):

21. Move the actuator to the open position.
22. Loosen the lock nut **3**.
23. Set the end position via screw **4**.
24. Tighten the lock nut **3**.

13.3 Threaded connection locking devices

2/2-way ball valve DN 10 - 50

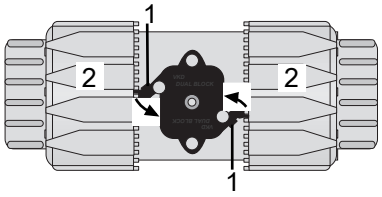

1. Press the latches **1** together and hold in position.
   ⇨ The teeth of the threaded connection locking device are retracted.

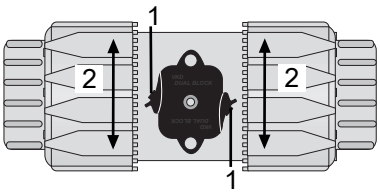

2. Turn the union nuts **2** to the desired position.

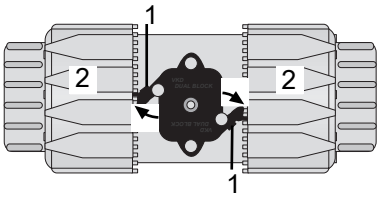

3. Release the latches **1** of the threaded connection locking device.
   ⇨ The teeth of the threaded connection locking device engage with the teeth of the union nuts 2 and fix them in place.

2/2-way ball valve DN 65 – 100

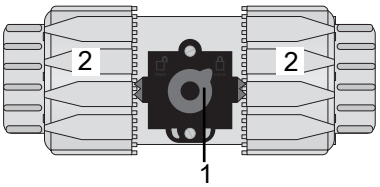

4. Turn the red blocking knob anticlockwise to the **FREE** position.
   ⇨ The teeth of the threaded connection locking device are retracted.

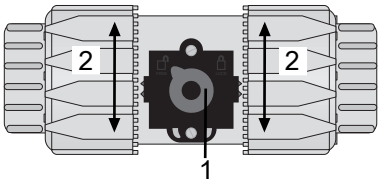

5. Turn the union nuts **2** to the desired position.

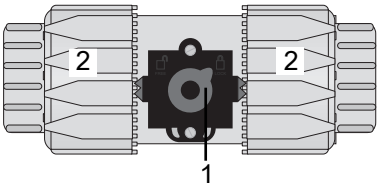

6. Turn the red blocking knob clockwise to the **LOCK** position.
   ⇨ The teeth of the threaded connection locking device engage with the teeth of the union nuts **2** and fix them in place.

3/2-way ball valve

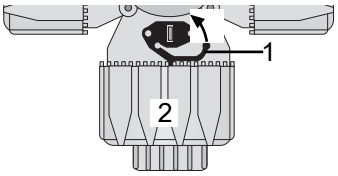

7. Press the latch **1** together and hold in position.
   ⇨ The tooth of the threaded connection locking device is retracted.

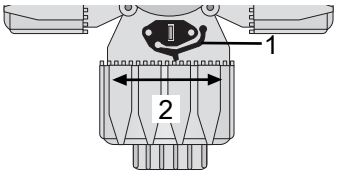

8. Turn the union nut **2** to the desired position.

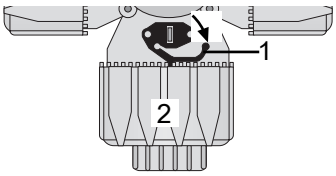

9. Release the latch **1** of the threaded connection locking device.
   ⇨ The tooth of the threaded connection locking device engages with the teeth of the union nut **2** and fixes it in place.

14 Troubleshooting

Error	Possible cause	Troubleshooting
Control medium escapes from connector 4 (control function NC) or from connector 2 (control function NO)	Actuator defective	Replace the actuator
The product doesn't open or doesn't open fully	Actuator defective	Replace the actuator
	Operating pressure too high	Operate the product with operating pressure specified in datasheet
	Foreign matter in the product	Remove and clean the product
	End positions incorrectly set	Correctly set the end positions
	Control pressure too low (for control function NC)	Operate the product with the control pressure specified in the datasheet
	Control medium not connected	Connect control medium
The product doesn't close or doesn't close fully	Actuator defective	Replace the actuator
	Control pressure too low (for control function NO and control function DA)	Operate the ball valve with the specified control pressure
	Control medium not connected	Connect control medium
	Foreign matter in the product	Remove and clean the product
The product is leaking between actuator and ball valve body	Union between valve actuator and mounting kit loose	Retighten union between actuator and mounting kit
	Union between mounting kit and ball valve body loose	Tighten union between mounting kit and ball valve body
	Actuator/mounting kit/ball valve body damaged	Replace actuator/mounting kit/ball valve body
Joint between ball valve body and piping is leaking	Incorrect installation	Check installation of ball valve body in piping
	Flange bolting loose/thread leaking	Retighten flange bolting / reseal threads
	Sealing material faulty	Replace sealing material
	Ball valve body installed incorrectly in piping	Check installation of ball valve body in piping
Ball valve body leaking	Ball valve body faulty	Check ball valve body for potential damage and replace if necessary
No flow	Ball incorrectly adjusted	Turn ball to the correct position

15 Inspection and maintenance

⚠ WARNING

The equipment is subject to pressure!

► Risk of severe injury or death.
● Depressurize the plant.
● Completely drain the plant.

⚠ CAUTION

Use of incorrect spare parts!

► Damage to the GEMÜ product.
► Manufacturer liability and guarantee will be void.
● Use only genuine parts from GEMÜ.

⚠ CAUTION

Hot plant components!

► Risk of burns.
● Only work on plant that has cooled down.

NOTICE

Exceptional maintenance work!

► Damage to the GEMÜ product.
● Any maintenance work and repairs not described in these operating instructions must not be performed without consulting the manufacturer first.

The operator must carry out regular visual examination of the GEMÜ products depending on the operating conditions and the potential danger in order to prevent leakage and damage.

The product also must be disassembled and checked for wear in the corresponding intervals.

1. Have servicing and maintenance work performed by trained personnel.
2. Wear appropriate protective gear as specified in plant operator's guidelines.
3. Shut off plant or plant component.
4. Secure plant or plant component against recommissioning.
5. Depressurize the plant or plant component.
6. Actuate GEMÜ products which are always in the same position four times a year.

15.1 Spare parts

2/2-way ball valve DN 10–50

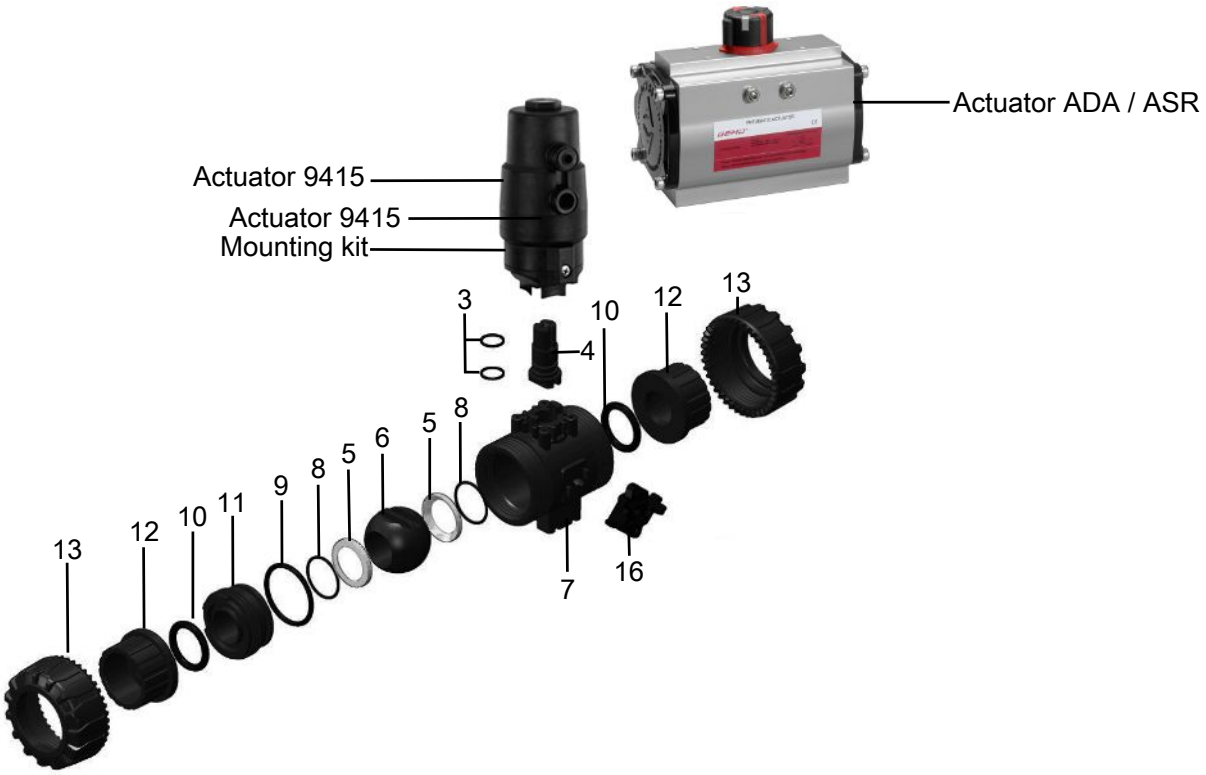

Item	Name	Design	Order description
3 5 8 9 10	Seal kit	 DNXX, FPM DNXX, EPDM	 717 XXSDS D4 717 XXSDS D14
4	Spindle	DNXX	717 XXPSP M
6	Ball, T-port	DNXX	717 XXPKUMT
	Ball, L-port	DNXX	717 XXPKUML
12	Insert	DNXX	717 XXPEL
13	Union nut	DNXX	717 XXPUM
	Actuator	**Control function 1, 2 and 3:** Actuator size 0 (DN15 + 20) Actuator size 1 / 2 (DN 25 – 50)	On request
	Mounting kit	DN 10 – 25 DN20 DN25 DN32 DN40 DN50	710 15SMK (88353335) 710 20SMK (88351044) 710 25SMK (88353770) 710 32SMK (88353388) 710 40SMK (88353778) 710 50SMK (88353779)

XX - corresponds to nominal sizes DN 10 – 50.

2/2-way ball valve DN 65–100

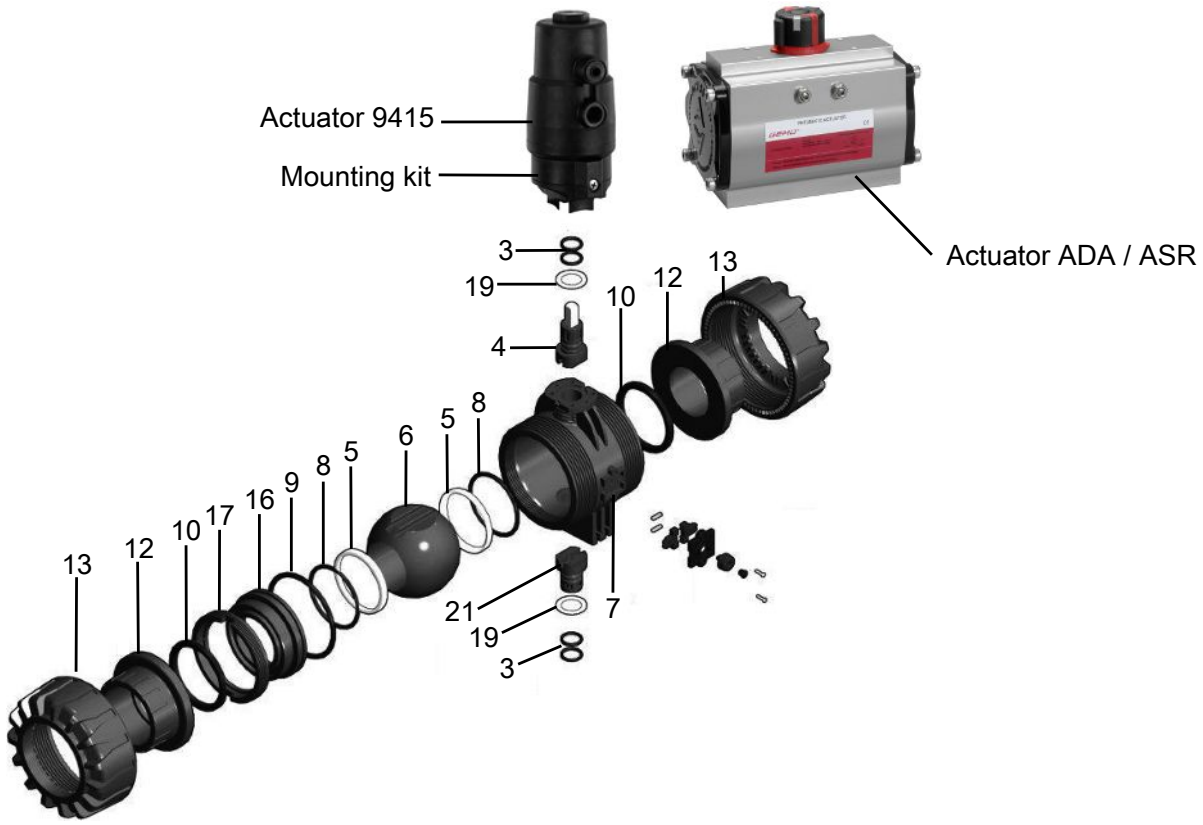

Item	Name	Design	Order description
3 5 8 9 10 19	Seal kit	DNXX, FPM DNXX, EPDM	717 XXSDS D4 717 XXSDS D14
4	Spindle	DNXX	717 XXPSP M
6	Ball, T-port	DNXX	717 XXPKUMT
	Ball, L-port	DNXX	717 XXPKUML
12	Insert	DNXX	717 XXPEL
13	Union nut	DNXX	717 XXPUM
	Actuator	**Control function 1 + 2:** Actuator size 3 (DN 65 + 80), actuator size DN 100 on request **Control function 3:** Actuator size 1 / 2 (DN 65), actuator size 3 (DN 80 - 100)	On request
	Mounting kit	DN 65 - 100	710 100SMK (88441143)

XX - corresponds to nominal sizes DN 65 – 100.

3/2-way ball valve DN 10–50

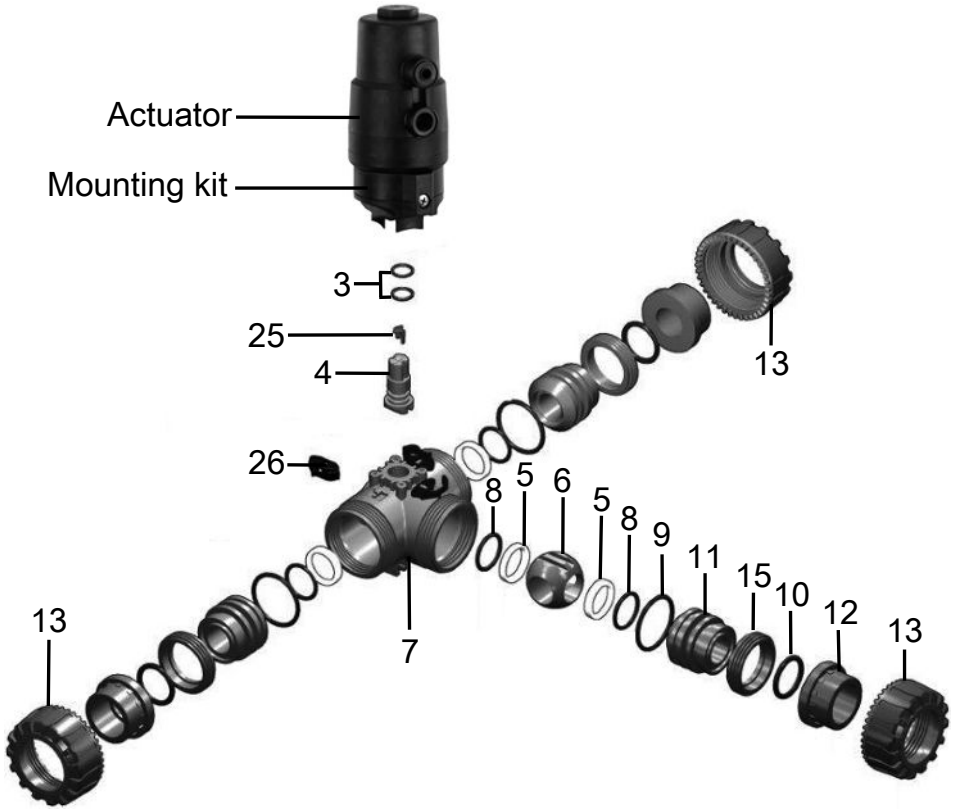

Item	Name	Design	Order description
3 5 8 9 10	Seal kit	 DNXX, FPM DNXX, EPDM	 717 XXSDS D4 717 XXSDS D14
4	Spindle	DNXX	717 XXPSP M
6	Ball, T-port	DNXX	717 XXPKUMT
	Ball, L-port	DNXX	717 XXPKUML
12	Insert	DNXX	717 XXPEL
13	Union nut	DNXX	717 XXPUM
	Actuator	**Control function 1, 2 and 3:** Actuator size 0 (DN 15 + 20) Actuator size 1 / 2 (DN 25 - 50)	 On request
	Mounting kit	DN 10 - 25 DN 20 DN 25 DN 32 DN 40 DN 50	710 15SMK (88353335) 710 20SMK (88351044) 710 25SMK (88353770) 710 32SMK (88353388) 710 40SMK (88353778) 710 50SMK (88353779)

XX - corresponds to nominal sizes DN 10 – 50.

15.2 Replacement of spare parts

NOTICE

► For an overview of spare parts see chapter "Spare parts".

15.2.1 Disassembly of 2/2-way ball valve DN 10-50

1. Depressurize the plant or plant component.
2. Move the actuator to the off position.
3. Release the threaded connection locking device (see chapter "Threaded connection locking devices").

NOTICE

► The threaded connection locking device can also be pulled off from the ball valve body when assembling or disassembling the ball valve.

4. Unscrew the union nuts **13** from the ball valve body **7**.
5. Remove the ball valve from the piping.
6. Remove the insert **12**.
7. Remove the gasket **10**.
8. Hold the ball valve vertically and open by 45°.

⇨ The remaining residual liquid runs out.

9. Move the ball valve to the CLOSED position.
10. Undo the screws of the mounting kit.
11. Pull off the actuator from the mounting kit.
12. Remove O-ring **9**, O-ring **8** and gasket **5**.
13. Carefully press out the ball **6** (taking care not to scratch the ball).
14. Press the spindle(s) **4** (21) into the ball valve body and remove.
15. Refit all parts in the reverse order.

15.2.2 Disassembly of 2/2-way ball valve DN 65-100

1. Depressurize the plant or plant component.
2. Move the actuator to the off position.
3. Release the threaded connection locking device (see chapter "Threaded connection locking devices").

NOTICE

► The threaded connection locking device can also be pulled off from the ball valve body when assembling or disassembling the ball valve.

4. Unscrew the union nuts **13** from the ball valve body **7**.
5. Remove the ball valve from the piping.
6. Remove the gasket **10**.
7. Move the ball valve to the CLOSED position.
8. Undo the screws of the mounting kit.
9. Pull off the actuator from the mounting kit.
10. Remove O-ring **9**, O-ring **8** and gasket **5**.
11. Carefully press out the ball **6** (taking care not to scratch the ball).
12. Press the spindle(s) **4** (21) into the ball valve body and remove.
13. Refit all parts in the reverse order.

15.2.3 Disassembly of 3/2-way ball valve DN 10-50

1. Depressurize the plant or plant component.
2. Move the actuator to the off position.
3. Release the threaded connection locking device (see chapter "Threaded connection locking devices").

NOTICE

► The threaded connection locking device can also be pulled off from the ball valve body when assembling or disassembling the ball valve.

4. Unscrew the union nuts **13** from the ball valve body **7**.
5. Remove the ball valve from the piping.
6. Remove the insert **12**.
7. Remove the gasket **10**.
8. Hold the ball valve vertically and open by 45°.

⇨ The remaining residual liquid runs out.

9. Move the ball valve to the CLOSED position.
10. Undo the screws of the mounting kit.
11. Pull off the actuator from the mounting kit.
12. Remove O-ring **9**, O-ring **8** and gasket **5**.
13. Carefully press out the ball **6** (taking care not to scratch the ball).
14. Press the spindle(s) **4** (21) into the ball valve body and remove.
15. Refit all parts in the reverse order.

15.3 Replacing the actuator

NOTICE

► The actuator can only be removed if the mounting kit is also removed.

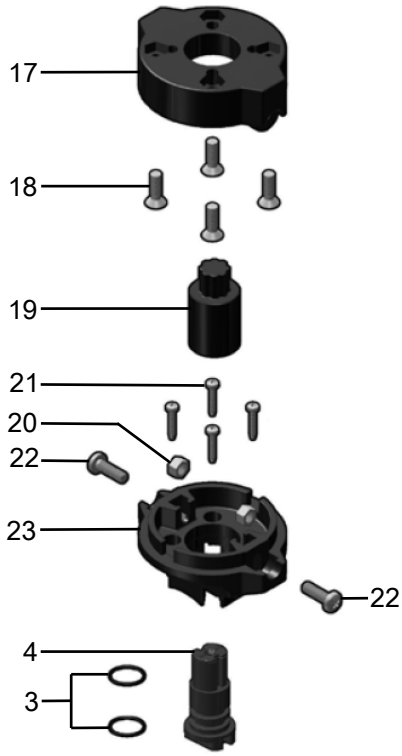

1. Unscrew the bolts **22**.
2. Remove the actuator and cover of mounting kit **17** from the body and base of mounting kit **23**.
3. Remove the bolts **18** to remove the cover of mounting kit **17** from the actuator and use the bolts **18** to mount it onto the replacement actuator.
4. Place the replacement actuator plus the cover of mounting kit **17** onto the base of mounting kit **23** and bolt together with the bolts **22**.

   ⇨ Remove the base of mounting kit **23** plus the bolts **21** and spindle adapter **19** of spindle **4** from the body if no other motorized actuator is to be fitted.

15.4 Cleaning the product

⚠ CAUTION

Cleaning agent

► Damage to the GEMÜ product.

● The plant operator is responsible for selecting the cleaning material and performing the procedure.

– Clean the product with a damp cloth.

– Do **not** clean the product with a high pressure cleaning device.

16 Removal from piping

1. Remove the clamp or screw connections in reverse order to installation.
2. Remove welded or solvent cemented connections using a suitable cutting tool.
3. Observe the safety information and accident prevention regulations.

17 Disposal

1. Pay attention to adhered residual material and gas diffusion from penetrated media.
2. Dispose of all parts in accordance with the disposal regulations/environmental protection laws.

18 Returns

Legal regulations for the protection of the environment and personnel require that the completed and signed return delivery note is included with the dispatch documents. Returned goods can be processed only when this note is completed. If no return delivery note is included with the product, GEMÜ cannot process credits or repair work but will dispose of the goods at the operator's expense.

1. Clean the product.
2. Request a return delivery note from GEMÜ.
3. Complete the return delivery note.
4. Send the product with a completed return delivery note to GEMÜ.

19 Declaration of Incorporation according to 2006/42/EC (Machinery Directive)

Declaration of Incorporation

according to the EC Machinery Directive 2006/42/EC, Annex II, 1.B for partly completed machinery

We, GEMÜ Gebr. Müller Apparatebau GmbH & Co. KG
Fritz-Müller-Straße 6-8
74653 Ingelfingen-Criesbach, Germany

declare that the following product

Make: GEMÜ

Commercial name: GEMÜ 710

meets the essential requirements of the Machinery Directive 2006/42/EC.

We also declare that the specific technical documentation has been compiled in accordance with part B of Annex VII.

The manufacturer or his authorised representative undertake to transmit, in response to a reasoned request by the national authorities, relevant information on the partly completed machinery. This transmission takes place:

Electronically

Authorised documentation officer **GEMÜ Gebr. Müller Apparatebau GmbH & Co. KG**
Fritz-Müller-Straße 6-8
74653 Ingelfingen, Germany

This does not affect the industrial property rights!

Important note! The partly completed machinery may be put into service only if it was determined, where appropriate, that the machinery into which the partly completed machinery is to be installed meets the provisions of this Directive.

2019-05-20

Joachim Brien
Head of Technical Department

20 Declaration of conformity according to 2014/68/EU (Pressure Equipment Directive)

EU Declaration of Conformity

in accordance with 2014/68/EU (Pressure Equipment Directive)

We, GEMÜ Gebr. Müller Apparatebau GmbH & Co. KG
Fritz-Müller-Straße 6-8
74653 Ingelfingen-Criesbach, Germany

declare that the product listed below complies with the safety requirements of the Pressure Equipment Directive 2014/68/EU.

Description of the pressure equipment:	GEMU 710
Notified body:	TÜV Rheinland Industrie Service GmbH
Number:	0035
Certificate no.:	01 202 926/Q-02 0036
Conformity assessment procedure:	Module H
Technical standard used:	EN 1983, AD 2000

Note for products with a nominal size ≤ DN 25:
The products are developed and produced according to GEMÜ process instructions and quality standards which comply with the requirements of ISO 9001 and ISO 14001.
According to Article 4, Paragraph 3 of the Pressure Equipment Directive 2014/68/EU these products must not be identified by a CE-label.

2020-10-23

Joachim Brien
Head of Technical Department

21 EU Declaration of conformity 2-way ball valve

Aliaxis
UTILITIES & INDUSTRY

FIP

DICHIARAZIONE / *DECLARATION*

FIP dichiara che l'attrezzatura a pressione / *FIP declares that the pressure equipment*:

TIPO VALVOLA / *VALVE TYPE*: sfera, membrana, farfalla, non-ritorno / *ball, diaphragm, butterfly, check*
MODELLO / *MODEL*: VKD / VXE / VEE / TKD / VKR / VM / MK / DK / DM / FK / FE / VR / SXE / SSE / VA / VZ / SR / VV / RV
GAMMA DN / *DN RANGE*: 32 ÷ 100
MATERIALE / *MATERIAL*: PVC-U, PVC-C, PPH, PVDF

secondo la Procedura di Valutazione della Conformità
according to the Assessment of Conformity Procedure:
Modulo / *Module* A2

sorvegliato dall'Organismo Notificato / *inspected by the Notified Body*:
PASCAL (n° 1115)
Via Scarsellini, 13
I-20161 (MI)
ITALY

in accordo alla norma / *according to the standard*:
EN ISO 16135, EN ISO 16136, EN ISO 16137, EN ISO 16138 e / *and* ISO 9393

è conforme ai requisiti della Direttiva 2014/68/EU per le Attrezzature a Pressione.
is in conformity with the requirements of the Pressure Equipment Directive 2014/68/EU.

Per quanto concerne la valvole con DN < 32 mm, sono conformi alla direttiva PED 2014/68/EU Art.4 Par.3, esse non possono essere marcate CE, ma sono progettate e collaudate secondo la stessa procedura delle dimensioni maggiori quindi in accordo a / *For what concern the valve sizes lower than DN 32 mm, they meet the PED 2014/68/EU Art.4 Par.3, so they can't be CE marked but, they are designed and tested in the same way of biggers so, they completely fulfil the criteria of*

EN ISO 16135, EN ISO 16136, EN ISO 16137, EN ISO 16138 e / and ISO 9393

In fede / Faithfully

Casella, 8/7/2016

Ing.Oleg Clericuzio
QUALITY ASSURANCE MANAGER

The underlined type (VKD) corresponds to GEMÜ 710 (2-way ball valve)

FIP - Formatura Iniezione Polimeri S.p.A.
Società Unipersonale - Soggetta a direzione e coordinamento da parte di Aliaxis Holding Italia S.p.A.
Loc. Pian di Parata - 16015 Casella - Genova - Italia
Tel +39 (010) 96211 – Fax +39 (010) 9621209
www.fipnet.it

C.F. - P.IVA - Iscrizione al Registro delle Imprese di Genova Nr.: 00276860103
REA C.C.I.A.A. Genova Nr.: 196879
Capitale Sociale: €6.200.000

Dati bancari
IBAN: IT 53L 01 005 01400 000000024674
Swift/BIC: BNLIITRRGEX
Banca Nazionale del Lavoro

22 EU Declaration of conformity 3-way ball valve

Aliaxis
UTILITIES & INDUSTRY

FIP

DICHIARAZIONE / *DECLARATION*

FIP dichiara che l'attrezzatura a pressione / *FIP declares that the pressure equipment*:

TIPO VALVOLA / *VALVE TYPE*: sfera, membrana, farfalla, non-ritorno / *ball, diaphragm, butterfly, check*
MODELLO / *MODEL*: VKD / VXE / VEE / TKD / VKR / VM / MK / DK / DM / FK / FE / VR / SXE / SSE / VA / VZ / SR / VV / RV
GAMMA DN / *DN RANGE*: 32 ÷ 100
MATERIALE / *MATERIAL*: PVC-U, PVC-C, PPH, PVDF

secondo la Procedura di Valutazione della Conformità
according to the Assessment of Conformity Procedure:
Modulo / *Module* A2

sorvegliato dall'Organismo Notificato / *inspected by the Notified Body*:
PASCAL (n° 1115)
Via Scarsellini, 13
I-20161 (MI)
ITALY

in accordo alla norma / *according to the standard*:
EN ISO 16135, EN ISO 16136, EN ISO 16137, EN ISO 16138 e / *and* ISO 9393

è conforme ai requisiti della Direttiva 2014/68/EU per le Attrezzature a Pressione.
is in conformity with the requirements of the Pressure Equipment Directive 2014/68/EU.

Per quanto concerne la valvole con DN < 32 mm, sono conformi alla direttiva PED 2014/68/EU Art.4 Par.3, esse non possono essere marcate CE, ma sono progettate e collaudate secondo la stessa procedura delle dimensioni maggiori quindi in accordo a / *For what concern the valve sizes lower than DN 32 mm, they meet the PED 2014/68/EU Art.4 Par.3, so they can't be CE marked but, they are designed and tested in the same way of biggers so, they completely fulfil the criteria of*

EN ISO 16135, EN ISO 16136, EN ISO 16137, EN ISO 16138 e / and ISO 9393

In fede / Faithfully

Casella, 8/7/2016

Ing.Oleg Clericuzio
QUALITY ASSURANCE MANAGER

The underlined type (TKD) corresponds to GEMÜ 710 (3-way ball valve)

FIP - Formatura Iniezione Polimeri S.p.A.
Società Unipersonale - Soggetta a direzione e coordinamento da parte di Aliaxis Holding Italia S.p.A.
Loc. Pian di Parata - 16015 Casella - Genova - Italia
Tel +39 (010) 96211 – Fax +39 (010) 9621209
www.fipnet.it

C.F. - P.IVA - Iscrizione al Registro delle Imprese di Genova Nr.: 00276860103
REA C.C.I.A.A. Genova Nr.: 196879
Capitale Sociale: €6.200.000

Dati bancari
IBAN: IT 53L 01 005 01400 000000024674
Swift/BIC: BNLIITRRGEX
Banca Nazionale del Lavoro

GEMÜ Gebr. Müller Apparatebau GmbH & Co. KG
Fritz-Müller-Straße 6–8, 74653 Ingelfingen-Criesbach, Germany
Phone +49 (0) 7940 1230 · info@gemue.de
www.gemu-group.com

Subject to alteration

11.2020 | 88593001